UNGUATOR®- Technology

GMP-approved preparation in a closed system

Operations manual

Electro Mortar & Pestle

CITO UNGUATOR® B / CITO UNGUATOR® B/R

CITO UNGUATOR® e / CITO UNGUATOR® e/s

CITO UNGUATOR® 2000

Contents

Page

Contents (cont.)

UNGUATOR® TECHNOLOGY

15 – 1000 ml
push-up jars with movable insert

	UNGUATOR® Jar Working-Volume	UNGUATOR® Jar Total-Volume	Product	Shipping-order quantity	Individual packing quantity
UNGUATOR® Jars	ml	ml H_2O	Prod.-Nr.	ct.	ct.
„Push up“ jars with movable insert	15	28	310	1000	10
for the hygienic measure, manufacture,	20	33	312	1000	10
storage, and dispensing of ointments,	30	42	320	1000	10
creams, gels, lotions, emulsions,	50	70	330	600	10
suspensions, etc.	100	140	340	500	10
Cap color: 15-200ml red, 300-1000ml white	200	280	350	250	5
SP : with spindle	300 SP	390	360	100	5
ADy : AirDynamic®-System (see below)	300 ADy	390	361	100	5
	500 SP	600	370	80	4
Cap colors: specialty	500 ADy	600	371	100	5
Green, blue, white (special order)	1000 ADy	1250	390	30	3
UNGUATOR® Jars	color 20	33	div	1000	10
Pastel colors	color 30	42	div	1000	10
pink, yellow, blue, turquoise	color 50	70	div	600	10
(special order)	color 100	140	div	500	10
UNGUATOR® Std mixing blade	# Gram/ml	Ø mm			
	(1) 15-30	36	210	1	1
7 sizes from ø 36 to ø 105 mm	(2) 50	43	202	1	1
	(3) 100	57	203	1	1
UNGUATOR® Jars from 15 – 1000 ml	(4) 200	57	200	1	1
	(5) 300	80	206	1	1
	(6) 500	80	207	1	1
	(7) 1000	105	197	1	1
UNGUATOR® Disposable blade					
(EWR) ø 36 to ø 57 mm	15 – 30	36	223	1600	20 / 80
Shaft: 1. 15 – 100 ml, 2. 200 ml	50	43	224	1600	20 / 80
EWR Start Set: Shaft 1. + 2. +	100/200	57	225	2000	25 / 100
small (I): 20, 20, 25	Shaft 1	15-100	210	50	1
large (II): 80, 80, 100 EWR	Shaft 2	100/200	211	50	1
	EWR I / II	15 – 200	376	1	1 / I
	Start-Set	ml Jar	377	1	1 / II

	Length	Opening ø mm	**Product** Prod.-Nr-	Shipping-order quantity ct.	Individual-packing quantity ct.
 **UNGUATOR® Applicators**					
Short with cap ø 1 mm Nose, eyes, ears	25 mm	1 mm	150	2000	20
long without cap ø 2 mm Rectum, Vagina	60 mm	2 mm	153	500	10
 **UNGUATOR® Jar coupling**	Length				
Filling adapter from large to small UNGUATOR®-Jars with AirDynamic® or Spindle	32 mm		161	500	5
 **UNGUATOR® Varionozzle**	Color	ø mm			
Application and Dosing	blue	1 mm	171	2000	50
blue ø 1 mm	yellow	2 mm	174	2000	50
yellow ø 2 mm	pink	4 mm	177	2000	50
pink ø 4 mm					
 **AirDynamik® System**					
Adapter ø 8,5 cm with 1. Pumpball 2. Automatic Pump	Adapter + Pumpball		196	20	1
	Adapter		197	50	1
	Pumpball		198	10	1
	Seal		199	100	4

Before the initial use of the system, please carefully read through this manual to better understand its operation and security advise, especially in chapter 11, page 38. Additionally, this manual contains a reference section for safe and professional use of the Unguator® mixing technology.

1. UNGUATOR® Advanced Mixing Technology General Information

1.1 Description

The UNGUATOR® Advanced Mixing System was designed to facilitate the preparation of many pharmaceutical, cosmetic, veterinary, and other formulations. Many superior quality ointments, creams, gels, suspensions, emulsions, powders, and other compounds may be prepared with the system in a fraction of the time and cost associated with conventional methods.

While no single device can accommodate every formulation in the pharmacy, use of the UNGUATOR® system offers an entire range of new compounds with consistent quality by replacing many of the traditional tools.

Method of preparation	Pharmaceutical Quality	Product consistency	Lift operation	Mixing parameter (rpm, Mixing time)
Mortar/Pestle	++	+	(–)	(individual)
Cito-UNGUATOR®-B	+++	++	manual	individual operation
Cito-UNGUATOR®-e	+++	+++	automatic	individually programmable
Cito-UNGUATOR®-2000	++++	++++	automatic	automatic

Increased product consistency of prescription ointments by increased automation

1.2 UNGUATOR® Patent Rights

Developed by Pharmacist Albrecht Konietzko of Bamberg, Germany, the UNGUATOR® Advanced Mixing Technology and UNGUATOR® Jars and Accessories are protected by German Patent (DE 4216252) and US Patent (No. 5.397.178).

- Mixing in UNGUATOR® Jars must be conducted in conjunction with CITO UNGUATOR® machines only.
- Mixing with CITO UNGUATOR® Machines must be conducted in conjunction with UNGUATOR® Jars only.
- Mixing with CITO UNGUATOR® Machines must be conducted in conjunction with Unguator® Mixing Blades only.

1.3 Trade Marks

1.4 Quality Assurance

All Unguator® products are subject to appropriate (DIN ISO 9001) quality test procedures at regular intervals. The manufacturing process of our materials and products are GMP approved.

- UNGUATOR® applicators, couplings, and jars are made from polypropylene (PP) plastic.
- UNGUATOR® Varionozzle and disposable mixing blades are made from polyethylene (PE) plastic.
- The blade of the UNGUATOR® standard mixing blade is made from Delrin® (polyoxymethylene) plastic. The shaft of the UNGUATOR® standard mixing blade is constructed from titanium-hardened NIRO stainless steel (grade 1.4301).
- All materials and coloring agents used in the manufacturing process are recognized as safe.

1.5 Literature:

[1] 1 Jahr UNGUATOR®- Rührsystem
Deutsche Apothekerzeitung (DAZ) Nr. 43
Jhg. 135/1995 S. 115-117
Konietzko, A., GAKO Konietzko GmbH, Bamberg

[2] Der UNGUATOR® ein neuartiges Salbenrührwerk
Pharmazeutische Zeitung (PZ) Nr. 30
Jhg. 141/1996 S. 30-33
Alberg et al., Pharmaz. Technologie TU Braunschweig

[3] Keimzahl in wasserhaltigen Dermatika
Pharmazeutische Zeitung (PZ) Nr. 29
Jhg. 142/1997 S. 36-40
Alberg et al., Pharmaz. Technologie, TU Braunschweig

[4] Alternativen zum Salbenrühren im Vergleich
Pharmazeutische Zeitung (PZ) Nr. 36
Jhg. 142/1997 S. 24 – 31
Zobel et al., Pharmaz. Technologie, Univ. Frankfurt a.M.

[5] Das UNGUATOR®- Rührsystem (URSY) als Alternativverfahren für die Herstellung dermatologischer Individualrezepturen
Deutscher Dermatologe: 46, Heft 6 / 1998 S. 545 – 549
Zobel et al., Pharmaz. Technologie, Univ. Frankfurt a.M.

[6] Bedienungsanleitung UNGUATOR®
Rühren im geschlossenen System (1998)
A.Konietzko, GAKO Konietzko GmbH, Bamberg

[7] System zur Salbenherstellung im Vergleich
Pharmazeutische Zeitung (PZ) Nr. 38.
Jhg. 143/1998 S. 53-65
R. Eifler-Bollen, Zentrallaboratorium
Deutscher Apotheker (ZL), Eschborn

[8] Voigt, R.: Pharmazeutische Technologie
(Für Studium und Beruf),
Jhg. 2000, 9. Auflage., S. 314-315,
Deutscher Apothekerverlag, Stuttgart

[9] Qualitätssicherung bei Rezeptur- und Defektursalben
UNGUATOR®-Technologie
Apotheker & Wirtschaft Nr. 7 Jhrg. 2/2001 S. 40-41 Albrecht Konietzko, 96049 Bamberg, unguator@gako.de
Verlag: medical economics – Leipzig

[10] Qualitätssicherung in der Rezeptur
Pharmazeutische Zeitung (PZ) Nr. 14
Jhg. 146/2001 S. 42-47
R. Eifler-Bollen, NRF, Eschborn
Prof. Dr. H. Möller, Zentrallaboratorium
Deutscher Apotheker (ZL), Eschborn, et al.

[11] Leitlinie zur Qualitätssicherung
... nicht sterilen Rezeptur- und Defekturarzneimittel
Pharmazeutische Zeitung (PZ) Nr. 29
Jhg. 145/2000 Seiten 105 - 116
Deutsche Apothekerkammer

[12] Flüssige Chlohexidin-Cremes: Rühren ist kritisch
Pharmazeutische Zeitung (PZ) Nr. 10
Jhg. 147/2002 Seiten 54 - 56

[13] Mit zeitgemäßen Herstellungsverfahren rühren
Pharmazeutische Zeitung (PZ) Nr. 13
Jhg. 147/2002 Seite 60 Diskussion: A. Konietzko
(GAKO) und Dr. H. Reimann (NRF)

2. UNGUATOR® Electro Mortar & Pestle Models

CITO UNGUATOR® B, CITO UNGUATOR® B/R, CITO UNGUATOR® e, CITO UNGUATOR® e/s, CITO UNGUATOR® 2000

Safety reference:
CITO UNGUATOR® machines correspond to the recognized safety standards for laboratory instruments. The machine's access and use are to be limited to authorized personnel only.

All CITO UNGUATOR® models are manufactured with sturdy, variable speed motors for custom formulations. While speeds generally decrease as viscosities increase, the strength of our motors were selected to keep speed fluctuations to a minimum.

While designed to prepare up to 200ml preparations, CITO UNGUATOR® B- and CITO UNGUATOR® B/R- machines can also be used to prepare larger batches (300ml and 500ml) of low and medium viscosity formulations. To avoid overloading the motor and causing an automatic shut-down, consistent manual oscillation must be used and these preparations should be limited to 4-6 minutes with ample time for cooling in between mixtures. The CITO UNGUATOR® e/s model has increased power over the UNGUATOR® B-R model to accommodate the increased volumes of 300 and 500ml Jars and ensures consistent formulations with the automatic jar oscillation. The CITO Unguator® e/s employs a brushless oscillation motor (no carbon changes) and more powerful mixing motor, which significantly reduces the risk of motor overload with larger, viscous preparations and increases the maintenance interval considerably (see back cover).

The CITO UNGUATOR® 2000 operates two brushless motors, larger than the UNGUATOR® e/s model to accommodate up to 1000ml Jar volume, as well as, enabling it to run indefinitely.

CITO UNGUATOR® B / CITO UNGATOR® B/R

Overload Protection

In the event of overload on either the UNGUATOR® B or UNGUATOR® e model machines, a safety device will automatically cut power to the motor for a period of 30 min. while the machine cools down. Operating the machine under normal recommended mixing parameters will not cause the machine to overload. After automatic shutdown with the UNGUATOR® e/s model, simply switch the machine off and restart after cool down period. After shutdown with the UNGUATOR® B/R model, simply unplug machine for the duration of the cool down and restart.

Maintenance Interval

Under normal operating conditions (3-5 preparations/day), the machine components will generally last for approximately 250 operating hours (for machines manufactured prior to 2002) and 1500 operating hours (for machines manufactured in 2002 and later) without any major servicing. We recommend however, basic care and regular, general maintenance for the optimal performance of your UNGUATOR® system. For complete chart on maintenance, please see back cover of manual.

2.1 CITO UNGUATOR®

The original CITO UNGUATOR® model makes use of a clamping socket to hold the mixing blade shaft. The Cito-UNGUATOR® can be converted to a CITO UNGUATOR® B model.

2.2 CITO UNGUATOR® B

(Bayonet socket) manufactured October 1997 and later

The UNGUATOR® B model holds the mixing blade shaft in a bayonet socket. This model features easy-to-use operation with variable speed control. Ideally suited for basic formulations and compounding, our introductory model offers superior results in all small scale formulations.
Speed range: 500 – 2000 rpm
Jar volume capacity: 15 – 200 ml
Manual “dial” speed control
Manual jar oscillation

When using the UNGUATOR® Jars, most raw ingredients may be weighed into the mixing container simutaneously. The jar lid (with appropriate mixing blade inserted through opening) should be screwed onto the corresponding jar loseley, so that the excess air may escape when the jar insert is pushed up. Once the air has been removed from the chamber, the lid may screwed tightly.

The prepared mixing container is then pressed into position with the mixing blade shaft tip inserted into the CITO UNGUATOR® B socket. The machine is turned on and speed regulated with the rotating speed knob. Using the other hand to hold the mixing chamber, the jar should be oscillated up and down (approx. 1 second per cycle) throughout the preparation with the mixing blade reaching both the jar lid and jar bottom to ensure optimal ingredient incorporation. The time of the preparation is dictated by the jar size in use. It is recommended that the mixing speed be brought to its highest level as quickly as possible for most formulations. At the end of the mixing process, hold the jar in the down position (mixing blade just beneath the jar lid) to rid the mixing blade of excess material.

2.3 CITO UNGUATOR® B/R

The new Unguator® B/R (beginning of the year 2005) is inclusive of the following changes:

1. Increased operation time and product life cycle with higher motor capacity
2. Effective increase in operation by 300%, allows 3 times longer operation, service-free, compared to the previous model
3. Precise regulation of rpm, by use of new speed controller, achieves continuous characteristics in regularity and reconciliation in differences of rpm.
4. Improved handling by use of new locking system
5. Reduced operating noise
6. Increased rpm range from 300 – 2000 during the mixing process
7. RPM indication with the help of new step by step RPM graphics, with RPM information labeled on the profile tube

The exterior shape of the device remains the same. The available variances for the devices are unchanged with 230V/50 Hz, 120/100V, 50/60 Hz.

2.4 CITO UNGUATOR® e

The UNGUATOR® e model features increased speed and volume ranges, programmable mixing parameters, and automatic jar oscillation. This unit allows the operator to program additional mixing requirements (time and mixing speed)

CITO UNGUATOR® e

into a display and operate the machine “hands free”, which allows the increase in product quality of the finished preparation. The unit has two modes of operation: HAND – the oscillation arm moves to lower position allowing the operator to manually control jar movement, and AUTO – the mixing Jar is screwed into oscillation arm and the machine controls oscillation. The blade is inserted into the jar by moving the blade through the central hole in the lid (see p. 18). The jar is screwed into the lifting arm of the machine and once the start button is pressed, the blade shaft will automatically be locked in position to be operated by the mixing motor. At this time, the mixing process is started and the jar moves up and down automatically.
Mixing time and level of rpm (0-9, see technical data p. 48) can be increased/decreased, before or during the mixing process. After the mixing program is finished, the machine enters automatically into the free spin mode (FSL), in order to clean the mixing blade from the excess material.

2.5 CITO UNGUATOR® e/s

The CITO UNGUATOR® e/s is an advancement of the CITO UNGUATOR® e and replaced this model starting from November 2002. To emphasize are the upgrades in gearing units for blade agitators and lifting mechanism, which decrease

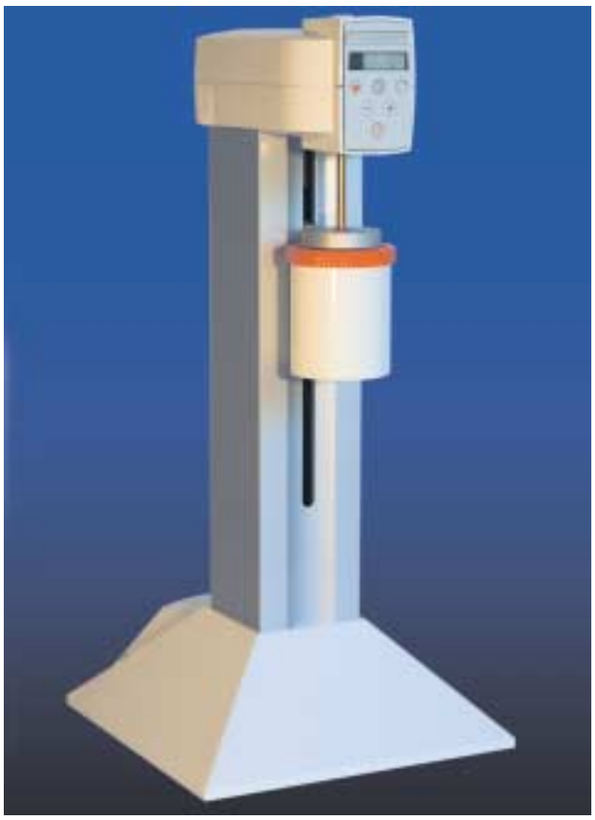

CITO UNGATOR® e/s

problems with the production of very low viscosity preparations. Further, the lower noise level and extension in service-free operation substantially (see technical data p. 48). The operation and handling remains almost the same as with the CITO UNGUATOR® e.

2.6 CITO UNGUATOR® 2000

The new CITO UNGUATOR® 2000 model is a fully automatic Electro Mortar & Pestle, which employs „on-board“ microprocessors allowing it to be operated independently or by the Windows-based UnguatorAssist software. Equipped with an increased range of mixing parameters, the versatility of the CITO UNGUATOR® 2000 is ideal for handling everything from a basic reaction blend at slow speed to the most complex mixing formulation.

Pre-programmed mixing parameters (time, speed, jar oscillation) are automatically adjusted by the microprocessors in the machine during the mixing process to achieve optimal results for all possible mixing preparations. Besides the application of the different mixing programs, the CITO UNGUATOR® 2000 can also be operated for a reaction mix program, without up/down movement at a speed range of 60-600 rpm, up to 6 hours.
The machine automatically records the exact mixing conditions, parameters, ingredients, and results after each preparation for use in documentation, labelling, and printing.

CITO UNGUATOR® 2000 Software for PC-controlled operation:

Die CITO UNGUATOR® - 2000 software “UnguatorAssist” has a 30-day test version and can be opened under www.unguatorassist.com and downloaded on your PC. Subsequently, the language is to be selected and the PC needs to be connected with the Unguator® 2000 with a 9-pin serial cable.

Severe injury is prevented by a very high safety standard of Unguator® machines with automatic lifting mechanism, CITO UNGUATOR® e or CITO UNGUATOR® e/s and CITO UNGUATOR® 2000, due to contact protection, resistance control at a force of 30...50N, leaking water prove protection, stability etc.

Interruption in the locking mechanism of UNGUATOR® mixing blade shaft with the device or the loss of a disposable blade from the blade shaft will be automatically indicated by the system.

Comprehensive investigations and appropriate certificates of TUEV Rhineland confirm the safety features of the equipment. The test labels are located on the bottom of each of the CITO UNGUATOR® devices. (gs: Examined security, CE: Label of Conformity)

CITO UNGUATOR® 2000

Features of the Cito-UNGUATOR® 2000:

- 7 UNGUATOR®-Standard Mixing Blades: 15-30 ml, 50 ml, 100 ml, 200 ml, 300 ml, 500 ml and 1000ml
- 1 Start-Set UNGUATOR®-EWR Disposable Mixing Blades 15-30 ml, 50 ml and 100-200ml
- 2 EWR-Disposable Mixing Blade Shafts 15-100 ml and 200 ml
- 1 User Handbook: CITO UNGUATOR® 2000

Additional equipment for operation with PC:

- Mixing Software CD for PC- use and prescription administration
- 9 – ply connection serial cable (COM 1/COM 2)
- User handbook: CITO UNGUATOR® 2000 use with PC

Computer requirements:

- Windows platform: 95 / 98 / NT / 2000 / XP
- 64 MB RAM
- Free disk space: 2 GB
- Monitor (17 in. or larger)
- Internet connection recommended

3. UNGUATOR® Accessories

3.1 UNGUATOR® Mixing Tools, Standard and Disposable Blades

UNGUATOR®-Standard-Mixing Blades are designed to operate with a specific corresponding UNGUATOR® Jar (i.e. 30 ml mixing blade for 30 ml Jar). To ensure proper operation, jars should not be used in conjunction with different size blades. CITO UNGUATOR® e, CITO UNGUATOR® e/s, and Cito-Unguator® 2000 use sensors to establish proper blade size and using an inappropriately sized mixing blade will result in an error message. UNGUATOR® Standard Mixing Blades are dishwasher safe (see Cleaning section 10). UNGUATOR® Standard Mixing Blades should be checked and cleaned of any residual ingredients or deposits from previous formulations. It is also possible to utilize a mild disinfectant bath to safeguard against leftover germs or contamination.

Standard mixing blades

The UNGUATOR®-mixing blade is designed to be slightly larger in diameter than its corresponding Unguator® Jar to optimize shear and total ingredient incorporation during the mixing process. For best results with all preparations, it is recommended to remove as much excess air as possbile from the mixing chamber by pressing on the jar insert (with jar lid slightly loosened) prior to the mixing process.

Agglomerates and micro fine crystalline materials are effectively reduced and dispersed, as they pass inbetween the standard mixing blade „wing“ and the wall of the Unguator® jar during the mixing process. This shear is similar to the action produced by the ointment mill or traditional mortar & pestle. The ointment or material „base“ being used acts a lubricant for the jar wall and mixing blade in the presence of crystallines and other solid substances. (Caution: do not mix the solid materials without a base or other semi-liquid material as damage to the mixing blade and jar may occur!).

Due to the increased surface area (number of individual wings) on the Unguator® Disposable Mixing Blades, material vibration occurs through the up and down motion during

normal mixing. This vibration results in mixing time requirements of approixmately one-third the amount required by the standard mixing blades with certain preparations. This is very useful, for example, in the production of a stable emulsion.
The materials used in the production of the mixing blades are resistent to staining. Some discoloration may occur after use with some materials, which is harmless when the blades have been properly cleaned in a dishwasher or cleaning bath. To avoid any discoloration, the operator may want to select Unguator® disposable mixing blades when mixing non-colorfast materials.

3.2 UNGUATOR® Disposable Blade

The UNGUATOR® disposable blade is compatible for use with all UNGUATOR® models. The disposable blade detaches from the blade shaft after use. The quality of the finished product can be checked by opening the main lid. After the mixing process is completed, the disposable blade is located under the main lid and may be removed or remain in the jar, when given to the patient. The cleaning is limited to the blade shaft alone.

UNGUATOR® disposable blades

3.2.1 The UNGUATOR® Disposable Blades – Sizes

UNGUATOR® disposable blades are available in three sizes to fit:

1. 15ml, 20ml and 30ml UNGUATOR® jars
2. 50ml UNGUATOR® jars
3. 100ml and 200ml jars

The hygienic packaging of disposable blades in UNGUATOR® jars with green lids facilitates handling and supports operation without cross-contamination (ref. 3.4).

3.2.2 UNGUATOR® Disposable Blade Shaft

The UNGUATOR® disposable blade shaft is available in two sizes:

1. for 15ml, 20ml, 30ml, 50ml and 100ml UNGUATOR® jars (short)
2. for 200ml UNGUATOR® jars (long)

The length of 15-100ml or 200ml is marked on the blade shaft.

The use of the correct size blade shaft is important, when operating the e, e/s, or 2000 model machines!

3.3 Handling: UNGUATOR® Disposable Mixing Blades

The UNGUATOR® Disposable Mixing Blade allows the operator to produce contamination-free preparations by maintaining a closed mixing environment throughout the entire mixing process.
Before making a formulation with the EWR Disposable Mixing Blade, be sure that the blade shaft is clean, dry, and devoid of any materials from previous preparations. For best results:

1. The disposable mixing blades are packed in their storage jar so that when opened, the operator can attach the blade to the mixing shaft by simply inserting the bottom end of the blade shaft tip into the centre of the blade and

turning one quarter turn counter clockwise (locking the blade in place).
Be sure:
a) The disposable mixing blades have two different sides. Be sure that the „upside“ indicator (small dot near the centre of the blade) is facing up.

2. Once the blade has been attached to the blade shaft, slide the blade shaft through the bottom of the mixing jar lid. Slide the jar lid down the mixing blade shaft until it rests just above the disposable mixing blade.

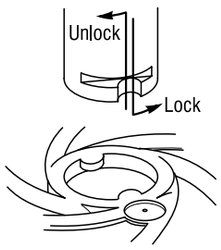

Use of the UNGUATOR® disposable blade

3. insert the mixing blade by turning the blade shaft counter clockwise into the jar (to ensure that the blade does not fall off the mixing blade shaft).
4. Before completely tightening the jar lid, be sure to press up on the jar bottom to expel any excess air from the mixing chamber.
5. Attach prepared mixing jar and blade combination to the machine.
6. In the event that the disposable mixing blade falls off the blade shaft, while inserting or at any point prior to mixing, it is possible to insert the blade shaft through the top of the jar cap and press the disposable blade through the jar ingredients to the bottom of the jar. Using a counter clockwise rotation, „blindly“ re-attach the shaft to the centre of the blade.
7. After the mixing process, ensure that the mixing blade remains in the end position, just beneath the jar lid (Free-Spin position).
8. Remove jar/blade combination from the machine and using clockwise rotation, „detach“ and remove the blade shaft from the preparation. While the mixing blade remains in the jar, it will not affect the formulation.

With the design of the disposable mixing blades, under similar mixing settings, the material contact is three times as high as when using a standard mixing blade. This increased movement of the mixing blade through the materials often leads to a quicker incorporation of ingredients. It is recommended, however, to employ the same mixing times, used with the standard mixing blades, to ensure proper homogeneity for every preparation.

3.4 UNGUATOR® Jars

The UNGUATOR® jar is designed as disposable container to serve simultaneously as measuring, mixing, dispensing and storage jar. The UNGUATOR® jars are sealed off in plastic strips and they should remain in these strips until use, to guarantee hygienic integrity.
The jars are fully assembled and delivered with closed lids. Cleaning or disinfecting the jars, prior to use, is not recommended.
The larger jar sizes (300ml, 500ml and 1000ml) may be cleaned in a dishwasher for re-use, as long as they have not

UNGUATOR® Jars

left the actual pharmacy premises. After extensive use of lids and moveable bottoms of jar sizes 300 – 1000ml, both may be ordered separately for replacement.
All UNGUATOR® jars are under permanent quality control to follow GMP proven and ISO guidelines. Appropriate labels are attached to individually-sealed plastic strips (see Manufacturer's certificate, page 43).

- As a mixing container, the UNGUATOR® jar offers the enclosed manufacture of formulations in an environment free of germ contamination or air intake
- The UNGUATOR® jar meets all necessary guidelines required for dispensing containers
- The finished product is easily and hygienically dispensed
- The moveable 'push-up' bottom enables the release of air prior to the mixing process and equally serves as dispensing aid
- The fill volume of the jars is measured, when the bottom of the jar is down and may reach 40% above the nominal volume:
  15/28ml, 20/33ml, 30/42ml, 50/70ml, 100/140ml, 200/280ml, 300/390ml, 500/600ml, 1000/1250ml
- The 1000/1250ml UNGUATOR® jar may only be used with the UNGUATOR® 2000 model
- The jar size is printed on the bottom of the moveable inserts
- UNGUATOR® jars may be heated in a hot water bath up to 85° degrees Celsius or in the microwave. Higher temperatures may tamper with the density of the UNGUATOR® jars or the mobility of moveable inserts
- Larger jars tend to close very solid. Can openers may be used or hot water rinsing over the lid in facilitating the opening of the jar. Prior application of paraffin on the welding of the jar is recommended for lubrication

3.5 UNGUATOR® Jar as Storage Container

The UNGUATOR® jars serve extremely well as storage containers for medium viscosity preparations. The 'push-up' mechanism of the moveable bottom guarantees that ingredients inside the jar are pushed to the top, which follows those criteria for extending the product shelf life. This process eliminates air intakes and germ contamination alike. Especially for those preparations that oxidize or evaporate quickly, the UNGUATOR® jars offer optimal protection.

3.6 UNGUATOR® Spindle

The UNGUATOR® – spindle serves as dispensing aid for 300/390ml and 500/600ml jars. Unused jars have the spindle attached to them and have to be removed by **rotating to the right,** prior to the mixing process. After removal of the spindle, the bottom of the jar should be pushed down with the standard mixing blade.

a) prior to the mixing process, the spindle can be used to push up the bottom to diminish air from the jar
b) prior to administering the finished preparation to the patient, the spindle needs to be inserted through the bottom of the jar **by rotating to the left until the spindle has reached its locked position.**

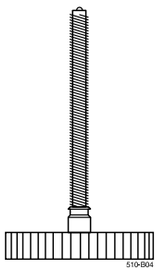

UNGUATOR® Spindle

c) the end user dispenses from the jar by rotating the spindle to the right (1 rotation dispenses app. 20 grams of the finished product (see pt. 9.8 and page 39 for dispensing pastes)
   (Attention: by rotation counter clockwise, the moveable bottom can be damaged by mistake – these jars can only serve as dispensing jar, but no longer as mixing jar.)

3.7 UNGUATOR® Varionozzle

The UNGUATOR® Varionozzle 1, 2, 4 mm are inserted into the central opening of the lid. They reduce the opening of the UNGUATOR® jars from 9 mm to 1, 2 and 4mm; and their domed shape offer the smooth application of the product over the skin. This allows for accurate dispensing of all, high to low, viscosity preparations.

UNGUATOR® Varionozzles

For differentiation in size, nozzles are colored as:

4mm: pink
2mm: yellow
1mm: blue

The 4mm opening fits standard syringes to fill precise dosages. All nozzles fit drop bottles for liquids.

3.8 UNGUATOR® Applicators

The UNGUATOR® applicators reduce the dispensed amount of low viscosity preparations and are used for precise dispensing of low-viscosity preparations.

- For ear and nose injections, the short applicator is obligatory
- For rectal and vaginal injections, the long applicator long is obligatory
- **The long applicator is also used as push-up aid of the 200ml jar**

UNGUATOR® Applicators and Coupling

AirDynamic® Pumpsystem

3.9 UNGUATOR® Coupling

The UNGUATOR® coupling connects larger and smaller jars to serve as transfer nozzle for hygienic dispensing from bulk preparations in the larger dosage containers. The coupling is connected at the center of the jar lid. For dispensing from 300ml and 500ml jars, the spindle or AIR-Dynamic® system may be used.
IMPORTANT! The finished product should be transferred shortly after the mixing process, since the product is often still warmer than room temperature and at a lower viscosity than after the cooling process.

4. Air-Dynamic® Pumpsystem

The AirDynamic® Pumpsystem consists of a pump ball and jar adapter that are connected by a hose. By pumping air pressure into the bottom of the jar, the moveable bottom rises towards the top and allows the easy dispensing of the formulation from the jar. This also allows for the easy transfer of finished materials from one jar to other jars via the jar coupling.

The large Unguator® Jars are particularly well suited as storage and transfer containers of semi-solid materials as problems with evaporation, oxidation, and contamination are largely avoided. The jars remain closed throughout the mixing process and the variable volume insert ensures that no air can enter the material during storage and dispensing.

5. Manufacturing Guidelines for Preparations with the UNGUATOR® Technology

The procedure is very easy and can best be learned by mixing sample preparations **– learning by doing.**

5.1 Mixing Unit, Preparation

The mixing unit (prepared jar combination) that is connected with the UNGUATOR® machine consists of the mixing jar, mixing blade and different mixing ingredients.
After unscrewing the small screw lid, the regular cap is removed from the jar. The mixing blade can now be moved, from above, into the jar body. In order not to hurt the sealing lip, the cap should be pushed loosely over the bayonet noses of the blade shaft. Afterwards, the cap should be pushed down with both thumbs over the larger area of the mixing blade shaft.
At this time, the moveable bottom is pressed completely downward. Subsequently, the mixing blade is taken out from the jar (the disposable blade with easy turn anti-clockwise)

5.2 Handling Instructions for the Mixing Process with the Unguator® Devices:

a) After removal of the small white cap, unscrew the main lid from the jar.
b) Weigh in the different ingredients into the jar.
c) Insert the mixing blade into the open jar.
d) Slide the main lid over the blade shaft and loosely screw on the lid onto the jar. During this process, the bottom of the jar is pushed down.
e) Before completely closing the lid (tightly), diminish air from the mixing jar by pushing up the bottom. (The air may be diminished during the mixing process, after half the mixing time has elapsed, especially in preparation of larger amounts of powder agglomerates)
f) Line up the mixing blade shaft with arrows on the rotating knob on the bottom of the machine head and screw in the center of the lid to the adjusting arm.
IMPORTANT! Do not attempt to secure blade by turning white rotating collar (e models manufactured before November 2002).
g) Review handling instructions of the CITO UNGUATOR® B, B/R, CITO UNGUATOR® e, e/s, and CITO UNGUATOR® 2000.
h) Screw the jar off the machine after the mixing process is completed.
i) Open the jar for quality check.
j) Pull the **standard** mixing blade through the central opening and remove access material from the blade with a spatula. Pull the **disposable** blade shaft out of the central opening by turning the shaft clockwise to detach from the disposable blade that remains inside of the jar after the mixing process.
k) Make your choice of dispensing tip, nozzles or applicators, to push in or screw on the central opening of the lid. Close the jar lid tightly after pushing out the excess air from the jar.
l) Place the label onto the jar and explain the unique features of the CITO UNGUATOR® jar to the patient, before administering final preparation.

5.3 Special Measures: Preparation of Pre-Grind/Pre-Grind

5.3.1 Suspensions

For fine dispersion of solid ingredients, it is recommended to pre-treat them, by initial grinding with a small portion of half solid ingredients, as follows:

First, the operator adds approximately 3-5% of the total preparation volume (base) into the jar by using a spatula or other implement to evenly coat the jar bottom. When solids or semi-solid substances are required, they should be added in increments of 2% total volume and mixed at high speed after the suspension base has been added to ensure proper distribution of ingredients. The jar insert should be in the fully „lowered“ position to allow for optimal shear between jar wall and mixing blade and the increments should mix through 10-20 oscillation cycles depending on materials used. Following this pattern will result in microscopic dispersion in most preparations, though this incremental-mix can be extended for harder materials and different results.

The main advantage of utilizing the „incremental-mix“ method for this type of preparation is the even distribution of the ingredients throughout the mixture and the quicker homogenization, especially when using the larger - sized UNGUATOR® Jars. Solids, semi-solids, crystalline substances, and powders are either broken down or further distributed with increased mixing times/speeds.

5.3.2 Emulsions

Occasionally it is also helpful to employ the incremental-mix when making emulsions depending on the ingredients. After the fat (base) phase, the water component should be added in small steps. The emulsification can be further accelerated by using warm water.

6. Mixing Preparations with: CITO UNGUATOR® B, CITO UNGUATOR® B/R, CITO UNGUATOR® e, and CITO UNGUATOR® e/s

6.1 CITO UNGUATOR® and CITO UNGUATOR® B, B/R

1. See section 5.1 on „Mixing Unit, Preparation“
2. Insert prepared UNGUATOR® Jar (closed jar with all ingredients and mixing blade) into the Cito-UNGUATOR® unit:
   - CITO UNGUATOR®**:** The mixing blade should be inserted until the locking „click“ is heard.
   - CITO UNGUATOR® B: The mixing blade should be completely inserted into the blade socket. The blade will lock into position with commencement of the mixing process. (Note: Be sure to have a good grip on the mixing jar before proceeding past this step.)
3. Begin the mixing process by turning the variable speed dial. Gently move the UNGUATOR® jar manually up and down the mixing blade shaft in an even movement. For best results, be sure to raise (A) and lower (B) the jar throughout the entire mixing range (when contact between mixing blade and jar lid/bottom is felt). Each jar oscillation should last approximately one (1) second.

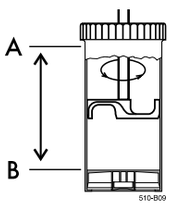

After the desired mixing time has elapsed, switch variable speed dial to „OFF“ position. If blade cleaning is desired, slightly loosen the jar lid (while still attached to unit) and gently press up the jar bottom to diminish any air from the mixing chamber. Re-tighten lid and start the unit, increasing to full speed, with the mixing jar in the lowest position (with mixing blade resting beneath jar lid) for a period of three (3) seconds.
Turn unit off and remove jar/blade shaft combination:

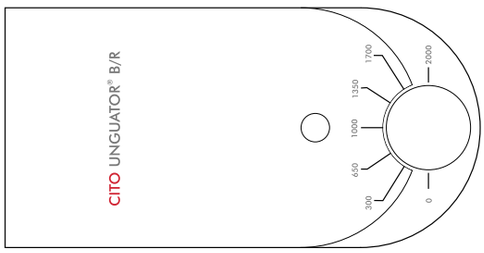

Cito-UNGUATOR® B/R: Upper site with rpm dialer

CITO UNGUATOR®: By pulling out blade shaft or pressing ejector knob on the top of the unit.
CITO UNGUATOR® B: With slight rotation of the jar preparation, depress the ejector knob on the top of the machine to release.
CITO UNGUATOR® B/R: With slight rotation of the jar preparation.

6.2 Functional Description: CITO UNGUATOR® e, e/s

For best performance, please allow machines to acclimate to room temperature before using, if stored in cooler temperatures (approx. 30 min.).

6.2.1 „AUTO“ mode (automatic operation)

1. See section 5.1 on „Mixing Unit, Preparation“
2. To turn on UNGUATOR® e/s model, find the „ON/OFF“ switch on the back of the machine base.
3. Press the „AUTOMATIC“ button to engage auto mode, the jar oscillation arm will move into „start“ position. Select mixing speed and duration if settings other than the default (level 5, 2 minutes) are required.
4. Screw prepared UNGUATOR® Jar into oscillation arm.
5. Press „Start“ button – oscillation arm will move up to locking position engaging mixing shaft into the bayonet socket at which point the mixing process will begin. Upon completion of the mixing process, the mixing blade will spin just beneath the jar lid to clear excess material from the mixing blade during the „FSL“ or „Free-Spin“ process. At the end of the process, the machine will automatically stop and display the exact time and speed used for the preparation.

6. Note: The „Start“ button must be pressed to raise the oscillation arm into position for the next preparation and reset the default mixing settings.

6.2.2 „HAND“ Mode (Manual Operation)

1. See section 5.1 „Mixing unit, preparation“
2. To turn on CITO UNGUATOR® e, e/s model, find the „ON/OFF“ switch on the back of the machine base.
3. Press the „Hand“ button to engage auto mode, the jar oscillation arm will move into „bottom“ position.
   Select mixing speed and duration if settings other than the default (level 5, 2 minutes) are required.
4. CITO UNGUATOR® e: Insert prepared UNGUATOR® Jar (closed jar with all ingredients and mixing blade) into bayonet socket from underneath.
   CITO UNGUATOR® e/s: Insert prepared UNGUATOR® Jar (closed jar with all ingredients and mixing blade) into the mixing socket from underneath.
   (Note: Be sure to have good grip on the mixing jar/lid before proceeding past this step.)
5. CITO UNGUATOR® e: When inserted, the mixing blade will engage with “click”.
   CITO UNGUATOR® e/s: Insert mixing blade completely. The socket will automatically engage the mixing blade with the first motor revolution.
   (Note: Be sure to have good grip on the mixing jar/lid before proceeding past this step.)
6. Press „Start“ button, mixing process will begin. Gently move the UNGUATOR® jar manually up and down the mixing blade shaft in an even movement. For best results, be sure to raise and lower the jar throughout the entire mixing range (when contact between mixing blade and jar lid/bottom is felt). Each jar oscillation should last approximately one (1) second.
   Caution: Be sure to use a firm grip when oscillating the mixing jar, especially with larger jar sizes and higher speeds. Consider using the „Auto“ mode for preparation over 200 ml.
7. If the „Free-Spin“ process is desired, the „Start/Stop“ button needs to be pushed prior to the end of the mixing process – in the display the message “FSLA” will appear and the “Free-Spin” will commence by pressing the “Start/Stop” button. Pull the jar down to bottom position to place the mixing blade directly under the lid for the blade cleaning process. After completing the „Free-Spin“, the display will show the elapsed mixing time and will automatically reset to the default mixing setting.
8. To remove the completed preparation from the machines:
   CITO UNGUATOR® e: Unscrew jar preparation from oscillation arm and depress the ejector knob on the top of the machine or twist the adjustment collar 1/4 turn clockwise to release.
   CITO UNGUATOR® e/s: Simply unscrew jar preparation from oscillation arm, the mixing socket will automatically release the mixing blade shaft.

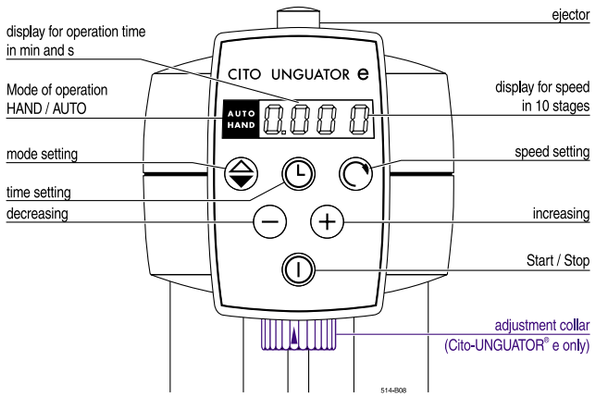

CITO UNGUATOR® e and e/s: Operation panel

Hints:

- Select „HAND“ mode for use with smaller-sized UNGUATOR® Jars.
- Stop-Function: The mixing process can be aborted at any time by pressing the „START/STOP“ button.
- After removing the finished preparation from the machine, ensure the blade-shaft collar is left in the full counterclockwise position for proper latching with next preparation.
- The speed and time parameters can be pre-set prior to the mixing operation, or adjusted during the mixing by pressing the „+“ or „-“ buttons.
- For high viscosity ointments and emulsions, it is recommended to start mixing at default speed setting (5) and increase to higher speeds after a period of at least 15 seconds to avoid overload.

- In the event of an overload, the CITO UNGUATOR® e model will automatically shut off. Restart with normal operation after a cool-down period of 30 minutes.
- Consult reference section on error messages for any problems encountered during the mixing process.

7. Mixing Preparations with CITO UNGUATOR® 2000

7.1 Programs for Various Preparation Types.

Important for all formulations, is a thorough evaluation of the prescription and proper selection of mixing function.

Working with programmed mixing settings:

Mixing type:	**Characteristics:**
Normal Example	Mixture containing 50% low viscosity substance Finished medicine ointments with base General mixing with bases
Emulsion (full mixing program) Example	Emulsions with 50% aqueous substances (Room temperature) Eucerin c. aqua aa
Emulsion + (Interval mixing with cooling to room temperature) Example	Emulsion with 50% melted materials with a supplement of hot water (75° C) Emulsific. aquosa, Lanette, Cera etc.
Suspension > 2% (without „pre-mixing“) Example	Mixture with 50% micro fine substance active material: > 2 % Zinc oxide, Salcylic acid
Suspension < 2% (with pre-mixing function) Example	Mixture wit 50% micro fine substance agglomeration, fine crystalline substances: < 2 % Betamethason, Sulfur praecipitatum, Metronidazol
Gel Example	Interval mixing to gel formation Hydroxypropylcellulose 400
—	mixture of gel, emulsion, or normal prep. With active material < 2%, with normal suspension < 2%

Paste	Dispensing from heated suppository mixture Fill suppositories with long or short applicator with warmed mixture
Powder	Powder mixture Best to grease blade shaft prior to mixing to avoid screeching noise (Paraffinum liquidum)

Variable mixing programs:

Manual Documentation:	Mixture with manual control of all mixing parameters (mixing speed, duration, and number of cycles) with save option after the mixing process (Program 1 – 20) for formula reproduction

Variable Mixing Programs: for lengthy mixing and reaction procedures

Combinationtion mixing Reaction mixtures Documentation:	Long or short term reaction mixing without jar oscillation Program with mixing speeds from 60-600 rpm in mixing beaker or other container with save option after the mixing process (only with connection to PC)

Note: there is no save option when the mixing process has been aborted

7.2 CITO UNGUATOR® 2000 (as „stand alone“ system)

On the CITO UNGUATOR® 2000 model, there are four main buttons for use with manual operation just beneath the Lyquid Crystal Display.

These buttons have the following functions:

1. ⓞⓚ „OK“ enter information and proceed to next screen
2. ⊕ Proceed through menu list (downward), increase time/speed selection
3. ⊖ Proceed through menu list (upward), decrease time/speed selection
4. ◉ Cancel, Stop (emergency), return to main menu

On the back of the machine find:
1 Main cable (electric)
1 Serial port
1 Main electrical ON/OFF switch

Connection and Installation:

The CITO UNGUATOR® 2000 is ready for operation once connected to an electrical supply. When the machine is turned „ON,“ the display will indicate the machine status. The machine display will „walk“ the operator through each program and preparation. The mixing program can be stopped, modified, or updated and continued as needed, at any point throughout the mixing process.

7.2.1 Normal Mixing

N1. By turning on the machine, the operator initiates the system boot and check, the program version and status will be displayed. After the loading of the system, the unit will automatically display the total preparation count. The machine will record automatically up to 19,900 preparations before requiring routine maintenance.

N2. After 5 seconds, the display will automatically change to

the main menu with program selection function.

The main mixing menu displays the following (first selection):

- **Emulsion +**
- **Emulsion**
- **Normal**
- **Suspension < 2 %**
- **Suspension > 2 %**
- **Gel**
- **Paste**
- **Manual**
- **Combination mix**

Select the preparation type with the ⊕/⊖ buttons and confirm with ◉.

(Manual and combination mixing – see below)

N3. The next selection will be the preparation size (jar) UNGUATOR® Jars (15 ml ... 1000 ml)

Select the preparation size with the ⊕/⊖ buttons and confirm with ◉.

N4. The next display will provide a summary of the specific mixing parameters selected (Preparation, Jar size, Pre-mixing, and Free-spin program).

N5. The oscillation arm will move into start position upon with ◉ confirmation or automatically after 60 seconds.

N6. The display will indicate to the operator that the preparation (prepared jar/mixing blade/ingredients combination) should be screwed into the oscillation arm. (Note: There is no need to move the blade shaft up into the shaft socket. Simply line the blade shaft tabs up with the arrow on collar)

N7. Once the preparation (prepared jar/mixing blade/ingredients combination) has been screwed into the oscillation arm and the ⓞⓚ button pressed, the oscillation arm will move the preparation into position where the machine sensors confirm jar/blade size by reading the mixing blade shaft tabs.

N8. In the event of an error, the display will indicate the mixing blade is not engaged.

With ◉ confirmation the display will indicate the request the operator to remove the jar.

Remove jar and continue and repeat from step **N5.**

N9. Correctly installed preparations with a „Pre-mix“ feature selected (i.e. Suspension <2%), will automatically initiate the pre-mixing process.

N10. Once the „pre-mixing“ is completed, the operator has the following options:

- Main mixing process -> button ⓞⓚ
- Repeat pre-mixing -> button ⊕
- Cancel -> button ◉

N10.1 Pressing the ◉ button at this point voids the current preparation and returns to the introduction display.

N10.2 Pressing the ⊕ button at this point pauses the mixing process, allowing the operator to modify the preparation, add ingredients, etc...and continue from step N7.

N10.3 Pressing the ⓞⓚ button at this point will begin the main mixing program.

N11. Each formulation is programmed in three display selections (formulation type, jar size, preparation summary), and a final display of the mixing progress.

N12. After completion of the main mixing process, the mixing data will be calculated and displayed.

The mixing data will include:
- Total number of mixing cycles (in Hexadecimal notation)
- Total number of revolutions
- Preparation number
- Program version number
- Identification number

The nine digit identification number consists of the following components:

03	04	00	02	U
Ointment type	Jar type	Manual Type Repeat the pre-mixing program	Revolutions	Interruption
1 Emulsion + 2 Emulsion **3** Normal 4 Suspension < 2% 5 Suspension > 2% 6 Gel 7 Paste 8 Powder 9 Manual 0 Combination mix	1 15 ml 2 20 ml 3 30 ml 4 50 ml 5 100 ml 6 200 ml 7 300 ml 8 500 ml 9 1.000 ml 0 Combination Mix	0 no Manual inputs 01 ... 20 Nr. of Manual-Program	Pre-mixing 2x repeated	A (without) U (with)

With the preparation of a reaction mixture, the amount of mixing time is calculated.

N13. Pressing the button or an elapsed time of 120 seconds will automatically return to the main menu.

N14. The following interruptions in the mixing process can occur:

N14.1 Interruption by pressing the button: Both motors stop and data is saved.

N14.1.1 The process may be restarted by pressing the button.

N14.1.2 Pressing the button again will cancel the current preparation.

N14.2 In the event of a technical error, both motors will stop.

In this unusual case, the unit must be switched „OFF“ forfeiting all mixing data. Once the machine has been switched „ON“ and the error resolved, the operator may begin normal use. If the display continues to indicate an error message once the proper steps have been taken, contact your service representative.

7.2.2 Manual Mixing

“Manual” Program

In general, most prescriptions and ointment formulations can be prepared optimally by selecting from the Standard Mixing Programs.
The individual programming with the “Manual” setting is recommended for pilot studies and for preparations, which must be completed under closely controlled conditions or where the quality assurance settings of the Standard Programs are not necessarily appropriate. Such preparations may include those where maximum shear or friction is required, or those, where certain ingredients must be mixed in a specific order or fashion.

The CITO UNGUATOR® 2000 microprocessor contains 180 different mixing programs within the “Manual” Program, including 20 settings for each jar size (1…20). These include “pre-grind” settings (1…15 = active, 0 = inactive *see table 2*), “main mixing” settings (20 programs with 3 functions *see table 1*), and “free-spin” settings (1…15 = active, 0 = inactive *see table 3*). By selecting a specific program number, all preparation types can have a “pre-grind” setting added before the mixing process and a “free-spin” setting after the mixing process.

The operator may save an unlimited number of manual programs when the machine is connected to PC.

The functions of the mixing programs

Speed (Lifting Motor):
The stroke is the relative distance of movement that the mixing tool moves throughout the mixing container. The lifting motor is located in the base of the machine. By increasing the speed (range 384 to 2860 rpm) of the lifting motor, the speed with which the lifting arm oscillates (moves up and down) increases. Conversely, if the speed of the lifting motor is decreased, the lifting arm will oscillate more slowly.

Speed (Mixing Motor):
The mixing motor is located in the head of the machine. The speeds of the mixing motor are transferred to the mixing blade via a belt mechanism. Slower speeds generally serve to produce a slow incorporation of ingredients, where higher speeds are used for homogenizing. The maximum speed setting is limited by the diameter of the jar size.

Number of cycles:
One cycle (or stroke) is defined as one full oscillation (once down and once up). In addition to the speed of the mixing motor, the frequency with which the mixing blade oscillates up and down through the mixing container is critical in the proper vertical mixing of ingredients. As a rule, appropriate vertical mixing of ingredients is achieved with no less than 35 cycles at maximum mixing speed regardless of jar size.

Display-Program parameters for Program numbers 1 - 20 for each jar size					
Lifting motor rpm *) RPM	**Mixing motor rpm **) RPM**				**No. of cycles**
	Steps with limitations of rpm by jar size				
	15-20-30 ml	50-100-200 ml	300-500 ml	1000 ml	
384	120	120	120	120	0 - 255
660	360	360	360	360	
936	600	600	600	600	
1212	840	840	840	840	
1488	1080	1080	1080	1080	
1524	1320	1320	1320	1320	
	1560	1560	1560	1560	
	1800	1800	1800	1800	
	2040	2040	2040	1992	
	2280	2280	2100		
	2496	2292			

Table 1. Programming Overview

When using the CITO UNGUATOR® 2000 as a “stand alone” unit (without PC connection), the Lifting Motor Speed is selected in levels (1-5)* and the Mixing Motor Speed is selected in levels (1-11)**. When the unit is connected to the PC, individual speeds may be selected.

Documentation – “Manual” Mixing Preparation

(to file under Jar size and Program number)

Date				**Jar Size**			
Prescription		**Preparation**		**Program Number**			
Quantity:		**Quantity:**		0, 1...15	**Pre-grind**		
Name		Designation		Nr.: 1... 15		Active	
				Nr.: 0		Inactive	
Cito-UNGUATOR®-2000				**Main Mixing Program**			
				Program 1 ... 16	**Lifting Motor (rpm)**	**Mixing Motor (rpm)**	**Number of cycles**
				Nr.: 1			
Composition:			g / ml	Nr.: 2			
				Nr.: 3			
				Nr.: 4			
				Nr.: 5			
				Nr.: 6			
				Nr.: 7			
				Nr.: 8			
				Nr.: 9			
				Nr.: 10			
Q-Control Pre-grind				Cito-UNGUATOR®-2000	Nr.: 11		
Repeat	1	2	3	4	Cito-UNGUATOR®-2000	Nr.: 12	
OK					Cito-UNGUATOR®-2000	Nr.: 13	
Q-End Control				Calculated Mixing Data	Nr.: 14		
				# of mixes:	Nr.: 15		
				# of cycles:	Nr.: 16		
				Preparation:	0, 1...15	**Free-spin**	
				Identification:	Nr.: 1 ... 15	Active	
Signature:					Nr.: 0	Inactive	

Notes:

Pre-grinding Program

16 Designations

Pre-grinding Program: Number	**Speed: Lifting Motor**	**Speed: Mixing Motor**	**Number of cycles:**
(0, 1...15)	(rpm)	(rpm)	
Number: 0	0	0	0
Number: 1	2860	2496	15
Number: 2	2860	2496	15
Number: 3	2860	2496	15
Number: 4	2860	2496	15
Number: 5	2860	2496	15
Number: 6	2860	2448	15
Number: 7	2860	2448	15
Number: 8	2430	2448	15
Number: 9	2430	2292	15
Number: 10	2430	1440	15
Number: 11	2430	1800	5
Number: 12	2430	2400	5
Number: 13	2430	2640	5
Number: 14	2430	2700	5
Number: 15	2430	3000	5

Table 2

Free-spin Program

16 Designations

Free-spin program: Number (0, 1...15)	**Speed: Mixing Motor (rpm)**
Number: 0	0
Number: 1	2496
Number: 2	2496
Number: 3	2496
Number: 4	2496
Number: 5	2448
Number: 6	2448
Number: 7	2400
Number: 8	2292
Number: 9	2292
Number: 10	2640
Number: 11	2640
Number: 12	2640
Number: 13	2640
Number: 14	2640
Number: 15	2640

Table 3

Product Uniformity

Product uniformity is achieved, if the jar size, preparation type, and programmed mixing parameters for the relevant mixture are observed. *Diagram 1* shows the point where uniformity is achieved based on a Eucerin – Water based emulsion test preparation. A decrease in mixing motor speed requires a proportional increase in the total number of oscillations to achieve the same product quality. While several different jar sizes use the same jar diameter (with different jar lengths), the number of appropriate revolutions and mixing duration are determined by the length of the stroke (the distance the mixing blade travels through the mixing container). In order to obtain the optimal product uniformity, the number of appropriate revolutions is dependent on both the jar diameter and length (*see diagram 2*).

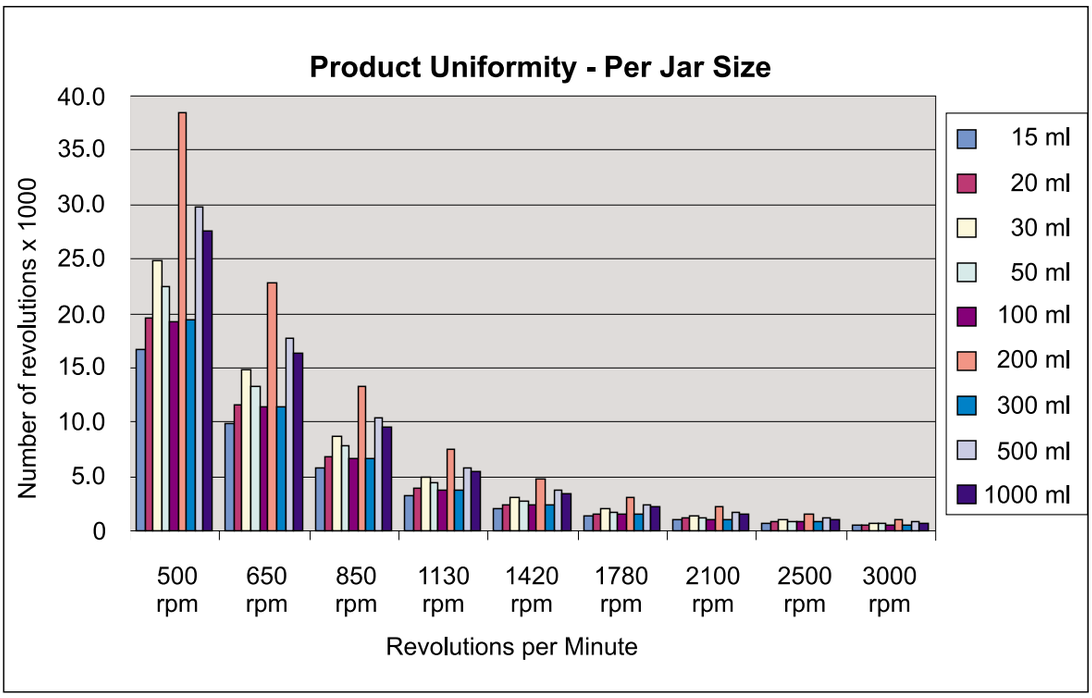

Diagram 1

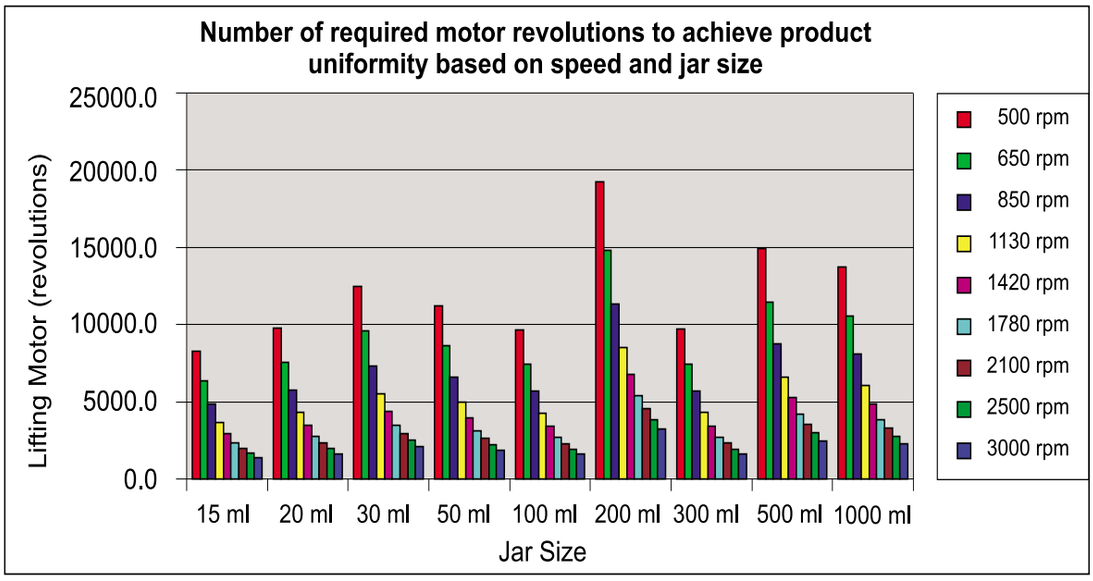

Diagram 2

The process for manual mixing is the same as with the automatic program selection, except that the operator has the ability to program specific mixing parameters based on unique requirements. The preparation set-up and selection is the same as with a pre-programmed formulation, though the possibility exists to modify the pre-mixing process, the Free-spin function, as well as, mixing time, speed, and number of mixing cycles. The selected mixing parameters for the manual operation can be stored and saved to be used again or modified.

M1. By turning on the machine, the operator initiates the system boot and check, the program version and status will be displayed. After the loading of the system, the unit will automatically display the total preparation count. The machine will record automatically up to 19,900 preparations before requiring routine maintenance.

M2. After 5 seconds, the display will automatically change to the main menu with program selection function. Select the preparation-type by pressing the ⓞⓚ button.

M3. Select the „Manual“ preparation-type by pressing ⊕ and ⊖ and confirm with the ⓞⓚ button.

M4. Select the appropriate jar size (15 ml ... 1000 ml) and press the ⓞⓚ button.

M5. Select the program number (1-20, when saved) and press the ⓞⓚ button.

M6. The display will indicate the option to start preparation or change the selected program.
The following selections are available:

- Select
- Change
- Delete

M6.1 Delete program: all existing data for this formulation number will be deleted.

M6.2 Program modify:

M6.2.1 Select a pre-mixing program (0 ...15)

M6.2.2 Select a Free-spin program (0 ... 15)

M6.2.3 The operator must confirm the following parameters:

- Oscillation speed. Choose from five (5) levels: 384 – 1003 – 1622 – 2241 – 2860 oscillations per minute.

- Mixing speed. Choose from eleven (11) levels: 120 – 358 – 596 – 834 – 1072 – 1310 – 1548 – 1786 – 2024 – 2262 – 2500 revolutions per minute.

• Total number of cycles (oscillations).

M7. Confirm with the ok button, the unit will select the starting position. Note: Start position will be selected automatically after an elapsed time of 60 seconds.

M8. The manual mixing program will be implemented as it would during the „Normal Mixing“ process (**N6** ... **N14)**.

7.2.3 Combination Mix

The mixing process during a reaction mixture proceeds without any jar oscillation with the supporting oscillation arm in a fixed position. The actual mixing speed and duration must be entered and the procedure processed.

R1. Switch the unit „ON.“ After the system boot and check, the main menu will be displayed.

R2. Select the appropriate preparation type (combination mix) with the ⊕ and ⊖ from the options and confirm by pressing the ok button.

R3. The oscillation arm will move into the full down position.

R4. Preparation of oscillation arm and assembly:

R4.1 In order to secure the clear mixing beaker during the combination mix, select an UNGUATOR® jar lid slightly larger in diameter than the including mixing beaker (i.e. 300, 500 ml). The jar lid will act as holding tray for the beaker and shold be screwed into the topside of the oscillation arm upside down, with the threads facing upward. The operator may select either the Standard Mixing Blade or the Disposable Mixing Blades for combination mixing. The blade should be fully inserted into the bayonet socket and secured with slight clockwise turn. The blade will automatically lock into place with the commencement of the mixing process.
Note: The diameter of the mixing blade used in the combination mix should always be smaller than the diameter of the mixing beaker.

R4.2 When producing a combination mix in a closed UNGUATOR® jar, the container may be fastened to the oscillation arm from underneath (as with other preparations) and in this instance, a mixing blade with same diameter to the mixing jar may be selected.

Confirm preparation in both cases with the ok button.

R5. Move the oscillation arm into the appropriate starting position.
When you are in the combination mix, as long as the ⊕ button is pushed down, the oscillation arm will move slowly throughout the oscillation range (up and down). Once the ⊕ button is released, the oscillation arm will come to a rest in the desired position. The direction of the oscillation arm can be reversed if pressure is applied to the arm during movement.
Note: In **R4.2**, the arrow on the adjustment collar must line up with the tabs of the mixing blade shaft during insertion into the bayonet socket to ensure proper engagement. The collar and blade shaft can both be adjusted by hand for proper alignment.

R6. Confirm the desired position of the mixing container and proper insertion of the mixing blade with the ok button.

R7. Select the required duration. Time index: 10 minutes – six hours.

R8. The mixture timing will be displayed as: hh:mm:ss – Press the ok button.

R9. Select the mixing speed (rpm)
(min ... max = 5 x 12 ... 50 x 12 rpm).
Default reaction speed: 300 rpm. Select with the ⊕ button.

R10. Unit displays the selected mixing parameters and is ready to begin reaction mix.

R11. Begin mixing process by pressing the ⓞⓚ button.

R12. The mixing process continues with countdown timer and speed displayed (hh:mm:ss).

R13. After the mixing has been completed, the unit will indicate the operator to lower the oscillation arm allowing the preparation container to be easily retrieved by pressing the ⊕ button.

R14. Remove the jar and mixing blade from the machine.

R15. The mixing process concludes as it would with the „Normal Mixing“ process (**N12**...**N14**) and the identification number is displayed.

8. Tips for Ointment Prescriptions with the UNGUATOR® System

8.1 General Observations and Handling

Since 2000, the German Pharmaceutical Advisory Board has recognized the quality guidelines achieved with a „closed“ system for the production and application of semi-solid pharmaceutical preparations and now recommends their use.

The advantages of the UNGUATOR® mixing technology compared to the traditional mixing with mortar & pestle and other conventional preparation methods is further described in the following literature:

- The possibility of GMP-approved ointment prescriptions in the pharmacy [2], [4].
- Standardization of ointment recipes [4], [8].
- Better homogeneity [2], [4], [9].
- Superior microbiology [3], [8].
- Contamination risk significantly decreased through closed system production: no unsanitary transfer of materials to individual application or dosing containers required [2], [3], [4], [8].
- Hygienic application, with no patient contamination [2], [3], [4],[8].
- Superior product quality and improved packaging ensure longer shelf lives [3], [4].

While it is impossible to provide precise mixing instructions/ measurements for all general and patient-specific pharmaceutical prescriptions, the basic guidelines outlined in this manual can be adopted for many.

The examples given are provided to illustrate the benefits of employing the UNGUATOR® technology compared to manual techniques. All prescriptions should be filled on a per-patient/prescription request under professional medical supervision and formulated specifically for the preparation required. With just a little experience with the system, most pharmacists can safely and quickly produce more than 90% of all pharmacy preparations with the UNGUATOR® technology.

Generally, all ingredients, whether oily, fatty, aqueous, powdered, etc... can be weighed into the UNGUATOR® Jars simultaneously without directly affecting final product quality.

UNGUATOR® Manufacturing Guidelines Quick Reference:

See also „Ointment preparations with the UNGUATOR® Technology

1. Weigh all individual recipe ingredients into appropriate UNGUATOR® Jar.
2. Incremental-mixing of all solid/semi-solid materials (2-3% per step) will accelerate homogenization and ensure product quality.
3. Suspensions may also require incremental-mixing. Note: Make sure jar insert is in bottom position when doing incremental-mixing to provide optimum shear.

4. Emulsion ointments: Waxes may be melted with hot water. Using hot water in the emulsion may also decrease emulsifying time.
5. UNGUATOR® Jars may be placed in microwave oven or hot water bath to heat mixing materials (<85°C).
6. Gels: Swelling may be achieved through several shorter mixing periods.
7. Reduce air pockets and contamination by pressing on jar bottom before completely tightening jar lid.
8. Completely tighten Jar lid and install onto machine.
9. Minimum speed: Generally, longer mixing times and higher mixing speeds produce the best product quality. The time and speed parameters of the individual preparations are automatically microprocessor regulated in the CITO UNGUATOR® 2000 model.
10. The best test of the product quality is through visual inspection. The UNGUATOR® operator will have a very good opportunity for this check when removing the larger size UNGUATOR® Standard Mixing Blades.
11. A visual check of mixing results and product quality is recommended also when the operator has selected the UNGUATOR® Disposable Mixing Blade (EWR). This is possible by removing the blade shaft and opening the Jar lid after mixing.
12. Documentation: With the CITO UNGUATOR® 2000 model, all mixing parameters, final product results, raw materials (amounts), load designation, and printing is automatically controlled by the EDV-protected software.

8.2 Interrupting the Mixing Process

The UNGUATOR® Standard Mixing Blades are designed to remain clean from most raw ingredients during the mixing process. It is recommended however, that the operator clean the tips of the Standard Mixing Blades manually with spatula or other implement when there is a high powder content in the preparation halfway through the mixing. Note: The bottom of the mixing jar must be pressed again and jar cap tightened to expel any air incorporated during the blade cleaning. Blade cleaning is not necessary when the operator is using the UNGUATOR® Disposable Mixing Blades (EWR).

8.3 Troubleshooting: Possible Sources of Error Messages

- **The Jar bottom was not completely pressed to the lowest position before the weighing in of ingredients.**
  Consequence: The total amount of ingredients may not fit into the container properly. Note: Total fill volume is 40% greater than working volume.
- **Failure to completely remove air from jar.**
  Consequence: Due to the centrifugal action during the mixing process, excess air collects around the mixing shaft allowing materials to stick, thereby interrupting the equal distribution of ingredients throughout the preparation.
- **Failure to press up jar bottom (after all ingredients have been added)**
  Consequence: The mixing process generates pressure inside the mixing chamber. If the jar bottom is in the fully-lowered position during mixing, the pressure may cause leakage of fluid ingredients around the mixing blade shaft or between the jar bottom and sleeve [1].
- **Mixing blade shaft damages the seal in the jar lid nozzle when installing**
  Consequence: If the seal around the inside of the jar lid nozzle has been damaged when putting the mixing blade shaft through the jar lid, it may lead to slight leakage, with a small amount of material climbing the mixing shaft during the mixing process. Tip: Placing a tissue or paper towel around the blade shaft for the specific preparation will keep any excess materials from splattering.
- **Failure to firmly tighten jar lid before mixing.**
  Consequence: The jar lid may loosen or twist off jar sleeve during the mixing process causing major material leakage.
- **Failure to press jar bottom, filling jar nozzle, after the mixing process.**
  Consequence: The jar bottom should be pressed after the mixing process to bring contents directly up to the jar nozzle opening to prevent a spray of materials during the initial application or dispensing [1].

9. Recommended Preparations

9.1 Suspension Ointments

Powders:

- Micro fine substances provide optimal results and should be used when available.
- Powder ingredients should be added to preparations after liquids to promote better wetting.
- Small amounts of powder ingredients should be added to ointment base and mixed through 10-20 cycles with jar insert in bottom position before adding the remaining ingredients (**A**).

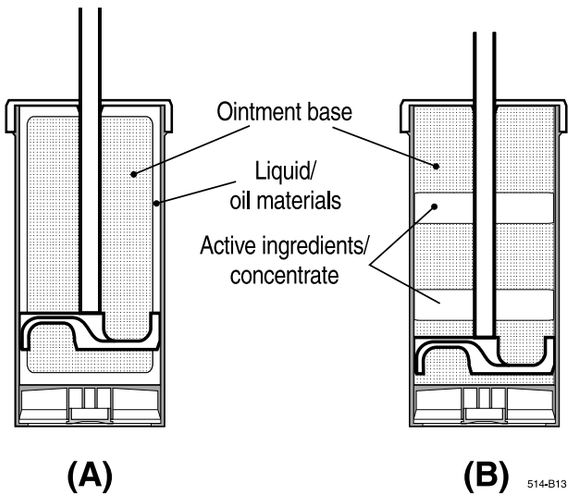

- When using larger jar sizes, large amounts of powders should be incorporated incrementally (**B**):
  a) This prevents sticking and build-up of materials on the mixing blade and shaft
  b) This also promotes the acceleration of even particle distribution throughout the mixing chamber.

Crystalline substances:

- Reduce all materials with mortar & pestle to powder form before weighing and adding to UNGUATOR® Jar.
- If the formulation includes a solvent for the crystalline material, dissolve in UNGUATOR® Jar (stirring and/or warming may be necessary) before adding remaining ingredients (e.g. urea with water, resorcinol with glycerol, etc...).
- If a solvent is required as part of the ointment base, a crystalline substance will eventually separate itself during the mixing process. This may require utilizing an ointment mill after the initial mixing progress and homogenizing thereafter with the CITO UNGUATOR®.
- It is advised to operate without a solvent in the CITO UNGUATOR® Jar and homogenize with CITO UNGUATOR® only after the preparation with the ointment mill.

Powder and crystalline materials:
Frequently used active powders and crystallines should be prepared (as micro fine) and stored beforehand, as an alternative to raw concentrates commonly available. The materials can then be readily added to the UNGUATOR® preparation easily during homogenization.

9.2 Gels

- Swelling rate and formation of gel structure are critical components of gel manufacture.
- Important: To minimize the amount of air incorporation in the gel, be sure to eliminate all air from the mixing jar before mixing.
- Use the mixing blade to gently stir material in addition to normal mixing) to bring any remaining air pockets to the surface. Air pockets often tend to rise in gels if they are left to rest.

9.3 Emulsions Ointments

- Emulsification of most ointment bases is accelerated by heat. The heat generated by normal operation of the machine during mixing is usually sufficient. Supplemental heating by hot water bath or microwave may also be used.
- When using the „Hand“ mode (manual operation) to prepare an emulsion, the mixing blade should be held in the bottom of the jar and the initial mixing (30-45sec) should incorporate the ingredients in the bottom half of the preparation first to ensure proper emulsification.
- Emulsion bases stored in cool environments may require additional heating for proper emulsification.

- Adapted emulsifiers may, under the supervision of the prescribing physician, enhance the stability and formation of emulsions or prevent separation (Liquor carbon, detergents in Vaseline, for example, emulsifies better with a small amount of lanolin or wool wax alcohol ointment).

9.4 Waxes, Hydrophilic Ointments, etc...

- It is often sufficient to pour heated ingredients or water, depending on the preparation, over Cera, Lanette N etc...directly in the UNGUATOR® jar prior to mixing.
- When additional heating or melting is required, all ingredients to be melted should be added to the UNGUATOR® jar and added to either a hot water bath (<85°C, 185° F) or microwave. (Note: only semi-aqueous and aqueous materials can be heated in the microwave).
- Be sure to manually stir heat throughout the heated material to avoid hotspots. Do not place mixing blades in the microwave.
- In many cases it is sufficient to homogenize heated materials three times for approximately (10) ten seconds at six minute intervals, cooling at room temperature or in refrigerator. The mixing blade should be left in the mixing jar during the cooling.
- As a rule, jar contents can also be either heated or cooled quickly to aid in preparation when wrapped in a cold or hot compress and manually stirred.

9.5 Mixing Time and Speed

The mixing time required for optimal homogenization is dependent on both the composition of materials used and jar size.

- While all recipes are unique, approximately one (1) minute is required to effectively blend up to 50 ml, approximately two (2) minutes for 100 ml, approximately three (3) minutes for up to 300 ml, approximately four (4) minutes for 500 ml, and approximately five (5) minutes for 1000 ml.
- When using the larger UNGUATOR® Jar sizes, some ingredients should be incorporated incrementally.
  Lower speeds are generally appropriate for most compounding and diluting „ready to use“ ointments. Higher mixing speeds create more heat and, therefore, should be employed when emulsifying. Higher mixing speeds should also be utilized when mixing powders.

As a general rule, a longer mixing time and higher mixing speed will create a more homogeneous final preparation and should be employed with larger particle size ingredients.

The individual handling of the CITO UNGUATOR® e and CITO UNGUATOR® e/s model's automatic operation allows the operator to establish appropriate mixing parameters for optimal product quality with their specific preparations. The CITO UNGUATOR® 2000 model also has a feature to customize and save formulations based on specific requirements.

The following minimal mixing parameters are recommended:

Jar Size	RPM (level)			
	650 (0)	1130 (3)	1450 (5)	2100 (9)
15 ml	10	3.3	2.0	1.0
20 ml	11.7	3.8	2.4	1.3
30 ml	14.8	4.5	3.0	1.5
50 ml	13.2	4.5	3.0	1.8
100 ml	11.5	4.8	3.5	2.0
200 ml	22.8	7.5	5.8	3.0
300 ml	11.5	6.0	5.8	3.0
500 ml	17.8	8.0	6.5	4.0

Average time for proper homogenization (in minutes)
(see technical data for regulating mixing speed for the **B**, **B/R, e**, and **e/s** models on page 48)
Default setting
CITO UNGUATOR® e: 2 min @ Level 5 (1450 rpm)
Proceed: Begin at level 5, increase to level 9 and adjust time accordingly.

The Cito-UNGUATOR® 2000 model is fully automatic. After a Jar size and preparation has been selected, pre-programmed mixing settings will be used throughout the preparation, unless otherwise specified.

9.6 Heating

The friction and heat created during the mixing process is desirable for many formulations as it reduces viscosities, increases wetting, and accelerates emulsification. Material warming also facilitates the emulsification of some oils and fats, i.e. Lanoline and Water mixtures. “Cold” emulsions (hydrophilic ointments up to 70% aqueous) can also be produced by adding small portion of water (approximately 10%).

- The maximum temperature measured inside the mixing chamber during the mixing process of a „highly viscous“ (Vaseline, Zinc Oxide) paste after six (6) minutes was 54° C. The temperature achieved inside the mixing chamber remains within safe ranges for pharmacy formulations and should not affect the chemical properties of most materials, as the closed system prevents the evaporation of more volatile substances such as ethanol oils and alcohol.
- Ointments will lower viscosities will heat only slightly during the mixing process [2].

9.7 Dispensing and Patient Information

While few „push-up“ ointment containers are available today, basic instruction on their use should accompany the administration to the individual patient or customer.
Liquids and low viscosity formulations should be dispensed using either an UNGUATOR® Applicator or appropriately sized UNGUATOR® Varionozzle to regulate the flow of material.
Medium viscosity preparations will easily pass through the jar lid opening, though a larger sized UNGUATOR® applicator or UNGUATOR® Varionozzle may also be used.
Very thick materials do not require an applicator or UNGUATOR® Varionozzle, though the UNGUATOR® Spindle or UNGUATOR® AirDynamic System will aid in the dispensing from the larger-sized jars.
The entire jar lid may be removed, as with a conventional ointment jar, for materials to thick to pass through the jar lid opening.

9.8 Ointment and Material Dispensing

The diameter of the UNGUATOR® Jar allows for the easy dispensing and application of all types of materials, regardless of viscosity. The opening of the UNGUATOR® Jars is nine (9) millimeters for all jar sizes.
The UNGUATOR® Varionozzles reduce the size of the Jar opening to four (4) mm, two (2) mm, and one (1) mm depending on material composition and desired application volume.
The following reference chart illustrates the volumes, which have been observed for most preparations when dispensing with UNGUATOR® Jars and Varionozzles.

10. Cleaning

It is recommended that the UNGUATOR® Mixing Blade be thoroughly cleaned or wiped down after each use. Rinsing with hot water or placing the blade in the dishwater may also be necessary when using certain ingredients.

Do not use sharp or abrasive materials to clean either the UNGUATOR® Units or UNGUATOR® Mixing Blades.

11. Warning

- CITO UNGUATOR® devices may only be attached to VDE 100 installed and safe outlets with 230/120 V rated voltage, depending on your location
- CITO UNGUATOR® devices are appropriate for use at normal room temperature (recommended values: Temperature range 15 °C - 30 °C, rel. Air humidity less than 80%.
- CITO UNGUATOR® devices are to be set up in such a way that the device can be turned on/off and the plug can be reached easily. Use by unauthorized persons must be prevented.
- CITO UNGUATOR® devices must not be dipped in water.
- Before opening the Cito UNGUATOR® devices always turn machine off and pull power supply plugs. Electrical parts should only be exchanged by a certified technician.
- Mixing blade should only be operated in the closed jar.
- Do not touch rotating parts (frictional heat).

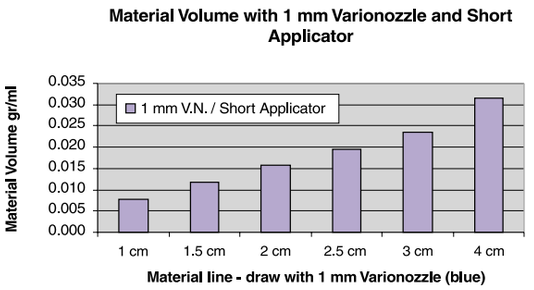

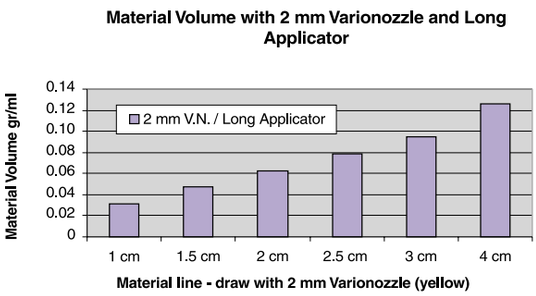

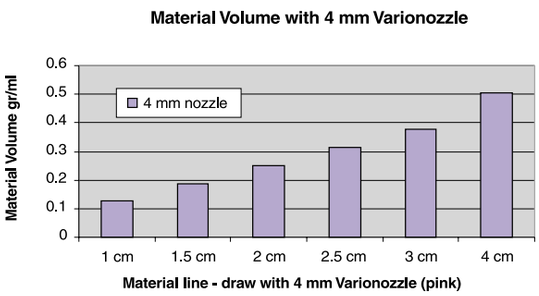

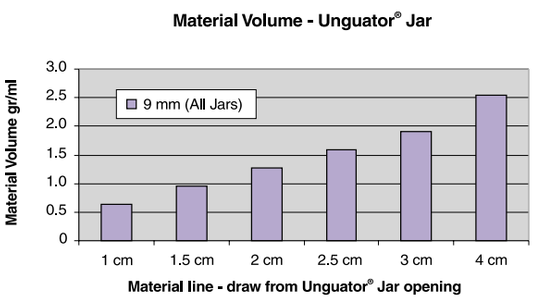

- Keep long hair away from the rotating mixing blade.
- CITO UNGUATOR® e, CITO UNGUATOR® e/s, CITO UNGUATOR® 2000: During the automatic lifting operation, long hair, body parts or other articles should be kept away from the devices - if necessary, operate the “On /Off” switch.
- The open areas the back or bottom of the machines always must not be covered by other articles.
- Note: If the CITO UNGUATOR® devices are not used according to these operating instructions or are operated with other accessories, which were not supplied or recommended by the manufacturer, the intended protection or warranty is no longer guaranteed.
- CITO UNGUATOR® devices are not intended for use in a dangerous atmosphere; while handling dangerous materials (e.g. combustible liquids such as alcohol o.a.) the relevant safety regulations are to be considered.

12. Service and Warranty

12.1 Troubleshooting

If your CITO UNGUATOR® unit does not function properly, there may be a very simple cause and remedy, which the operator or electrician may be able to rectify. Before sending the unit if for repair, please check the following possibilities:

- If your CITO UNGUATOR® machine fails to turn on, be sure to check that the unit is properly plugged into to properly functioning electrical supply.
- Your CITO UNGUATOR® machine may have automatically shut down due to overloading. Ensure that the power supply has been disconnected or that the machine has been switched „OFF“ for a period of thirty (30) minutes during cool down.
- Defective cabling may be replaced with (Polychlorophren coating) Coated HO5 RN-F electrical cable.
- CITO UNGUATOR® e models produced before September 2002 are supplied with carbon-contact motors. After approximately 200 operating hours, the two (2) contact carbons (top motor only) need to be replaced by local repairman or technician. Included within the base plate of the machine are three (3) pairs of replacement carbons. The replacement of these parts provides a good opportunity to clean the „Commutator.“

Replacement carbons are found within the motor casing of the CITO UNGUATOR® and CITO UNGUATOR® B units.

12.2 Manufacturer's Service and Warranty

The manufacturer guarantees the CITO UNGUATOR® machines against defective components and malfunction, irrespective of retailer's obligation, for a period of fifteen (15) months.

- The manufacturer's warranty covers the CITO UNGUATOR® machines only and does not extend to UNGUATOR® mixing blades, jars, or other accessories.
- In reference to manufacturer's service and repair of the CITO UNGUATOR® and CITO UNGUATOR® B models, please disconnect the unit drive head from base via wing nut under the unit stand and return drive head only.
- In reference to service and repair of the CITO UNGUATOR® e/s, 2000-units, please send the complete unit in original packing to the appropriate service provider.
- Any defects in materials or workmanship, will be repaired free of charge, during the warranty period.
- Maintenance and repair charges will be issued for any work completed outside the warranty period or for worn parts after a written estimate has been provided by the manufacturer.
- The manufacturer's warranty will be voided by any unauthorized attempts to repair the machine. The warranty does not extend to damage caused by improper use, failure to follow operating instructions, or failure to conduct routine maintenance.
- Warranty certificate, with date of purchase, retailer's stamp and signature, and/or receipt must be presented with all warranty claims.

13. Manufacturer and After-Sales Service

For assistance with technical questions not answered in the operations manual, or for spare parts, please contact the appropriate service provider directly.

For technical service:

(except North America) **SMS Heiztechnik GmbH**
Unguator® Customer Service
Am Köhlersgehäu 50
D-98544 Zella-Mehlis/Thüringen
Fon: +49 3682 / 455 0
Fax: +49 3682 / 455106
E-mail: f.wilhelm@smszm.de
E-mail: hj.grieser@smszm.de

(inside North America) **Engineering Unlimited**
Unguator® Customer Service
1320 12th Avenue North
Minneapolis, MN 55411-4063
Fon: (612) 522 4040
Fax: (612) 522 2829
E-mail: rcwerner@engunl.com
http://www.engunl.com

14. Licensing and Distribution Information

GAKO Konietzko GmbH
Oberer Stephansberg 49 g
D-96049 Bamberg
Telefon: +49 951 / 5 82 55
Telefax: +49 951 / 50 06 02
E-mail: unguator@gako.de
http://www.gako.de

GAKO International AG
Bleicherweg 33
CH-8002 Zürich
Fon: (41) 43 222 4240
Fax: (41) 43 222 4241
E-mail: info@unguator.com
http://www.unguator.com

15. Distribution and Terms of Delivery

The distribution of CITO UNGUATOR® machines and accessories is conducted exclusively through registered wholesale organizations by agreement with GAKO Konietzko GmbH and their subsidiaries.

16. CITO UNGUATOR® e: Error Messages and Remedies

Display	Corrective action	Possible cause
FE 0	Press „START“ button Supporting arm moves slowly to next limit position	Unit was switched „OFF“ prematurely Momentary power failure
FE 1	Remove Jar and press „START“ button Supporting arm moves to pre-selected position	Mode change was attempted while prepared Jar was engaged, or Attempt was made to start unit while prepared Jar was engaged
FE 2	Press „START“ button. Display shows „FE 0“	Supporting arm fails to move, or moves slowly
FE 8	Press „START“ button Engage prepared Jar and restart	„HAND“ mode, jar not engaged
FE 9	Supporting arm automatically returns to starting position	No Jar mounted on supporting arm
FE 9	Remove Jar, -Press button	Mixing blade not engaged or disengaged
FEA	Press „START“ button	Motor overload
FEA	Turn unit „OFF“, restart after 20 minutes	Overload protection

The machine display will indicate with an error message when an inappropriate mixing blade size has been selected for a given jar size, or if a new preparation is started from the final position of a previous one without selecting the „START“ position.
Operator error, operating conditions, or other forces may cause errors not covered above. In the event of an error not remedied by one of the above actions, disconnect power supply for a period of ten (10) seconds before attempting restart. If the condition continues, contact your service representative.

UNGUATOR® TECHNOLOGY

D – 96049 Bamberg
Ob. Stephansberg 49g
Albrecht Konietzko, Drogist
http://www.gako.de

phone: +49 <0> 951 58255
fax: +49 <0> 951 500602
mobil: +49 <0> 172 9364025
E-mail: unguator@gako.com

GAKO
Konietzko GmbH

„NICHTS SIEHT HINTERHER SO EINFACH AUS, WIE EINE VERWIRKLICHTE UTOPIE."
WERNER VON BRAUN

Bamberg, 25.06.02

Manufacturer's Certificate

Plastic UNGUATOR® Jars and UNGUATOR® accessories are produced exclusively with materials and coloring agents under the conditions and specifications outlined by the:

Consumer Article Regulation of Germany (04/10/92)

and are recommended by:

German Federal Health Office (BGA 1993)

for materials in contact with food.

Product*	Material**	Color concentrate**	
Unguator - Jar***		Standard	Cosmetic
1. Jar Cap	polypropylene clear	white	colored
2. Jar Lid	polypropylene clear	red/white/green/blue	colored
3. Sleeve	polypropylene clear	white	colored
4. Insert	polypropylene/polyethylene	–	–
5. Insert Cap	polypropylene clear	white	white
6. Jar Spindle	polypropylene clear	white	
Long Applicator	polypropylene clear	white	
Short Applicator with Cap	polypropylene clear	white	
Jar Coupling	polypropylene clear	white	
Varriomozzle blue/yellow/red	polypropylene clear	blue/yellow/red	
Standard Mixing Blade	polyoxymethylene	–	
Disposable Mixing Blade	polymide white	–	

* Licensed manufacturer, EGS, D-98544 Zella-Mehlis is DIN EN ISO 9001 certified
** Materials and coloring agents are BGA Certified by the licensed manufacturer
*** Analysis certification - ZL packing regulation DKII/1994 (packing sleeves)
*** Plant: principle representation (Certified by Licensed Manufacturer)

GAKO Konietzko GmbH
96049 Bamberg / Germany

Albrecht Konietzko
Produktionskontrolle

Gerichtsstand Bamberg
Handelsregister Abt.B Nr.: 2714

Deutsche Apotheker- und Ärztebank e.V., Würzburg
BLZ 790 906 24 Kto 0003 818 306

CITO UNGUATOR® B

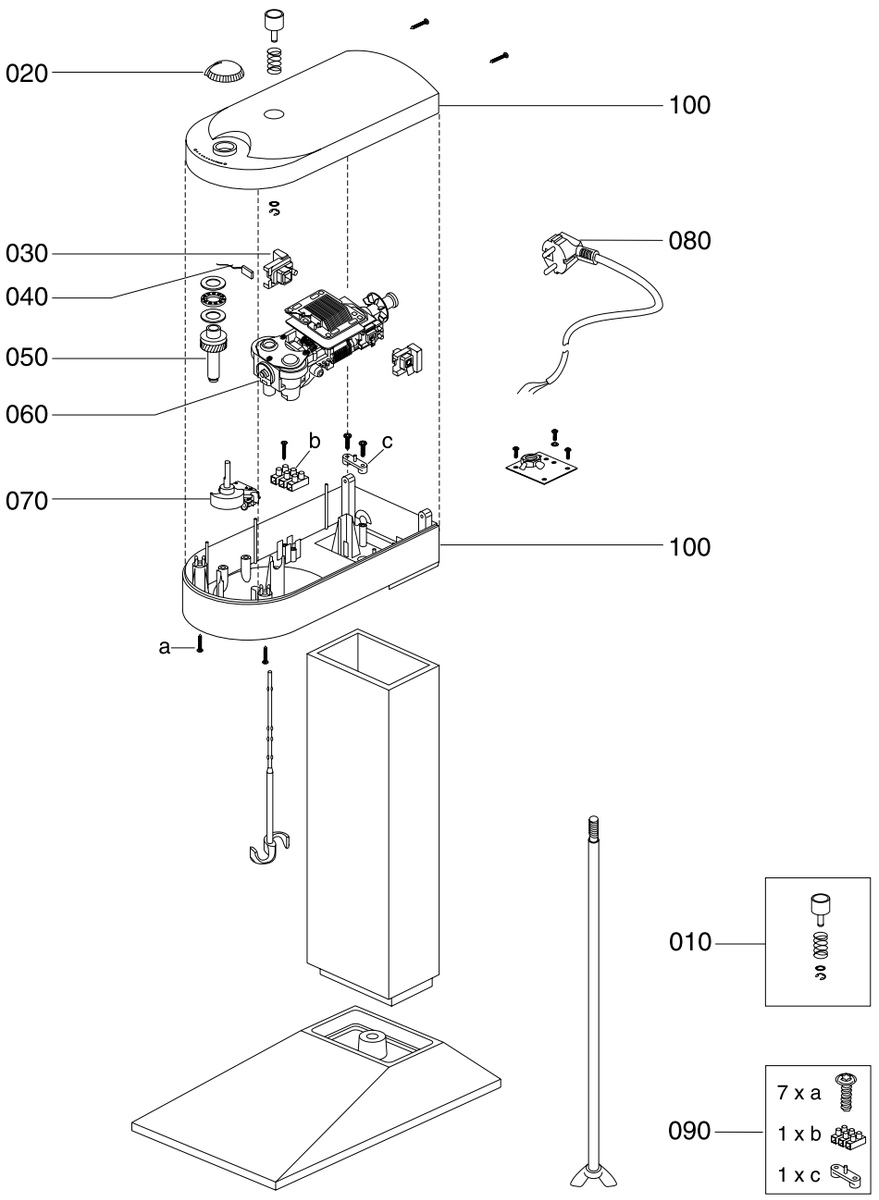

17. Spare Parts List: CITO UNGUATOR® B, CITO UNGUATOR® B/R

CITO UNGUATOR® B:

Machine configuration 230 V 50 cps, Product no. E 100 0005:

Pos.	Description	Spare part-Nr.	Notes
010	Eject mechanism	B100X188	
020	Adjusting knob	B100X184	
030	Brush holder	B100E050	
040	Temperature limiter	T100E008	
050	Hollow shaft	B100X187	
060	Motor gear unit	B100X186	
070	Speed controllerS400/10	B100X182	
080	Connection cable 1,60 m	B100E100	
090	Small part package	B100X002	
100	Housing top	B100X180	

Machine configuration 120 V 50/60 cps, Product no. E 100 0016:

Pos.	Description	Spare part-Nr.	Notes
010	Eject mechanism	B100X188	
020	Adjusting knob	B100X184	
030	Brush holder	B100E050	
040	Temperature limiter	T100E008	
050	Hollow shaft	B100X187	
060	Motor gear unit	B100X185	
070	Speed controllerS400/10	B100X182	
080	Connection cable 1,60 m	B100E105	
090	Small part package	B100X002	
100	Housing top	B100X180	

CITO UNGUATOR® B/R

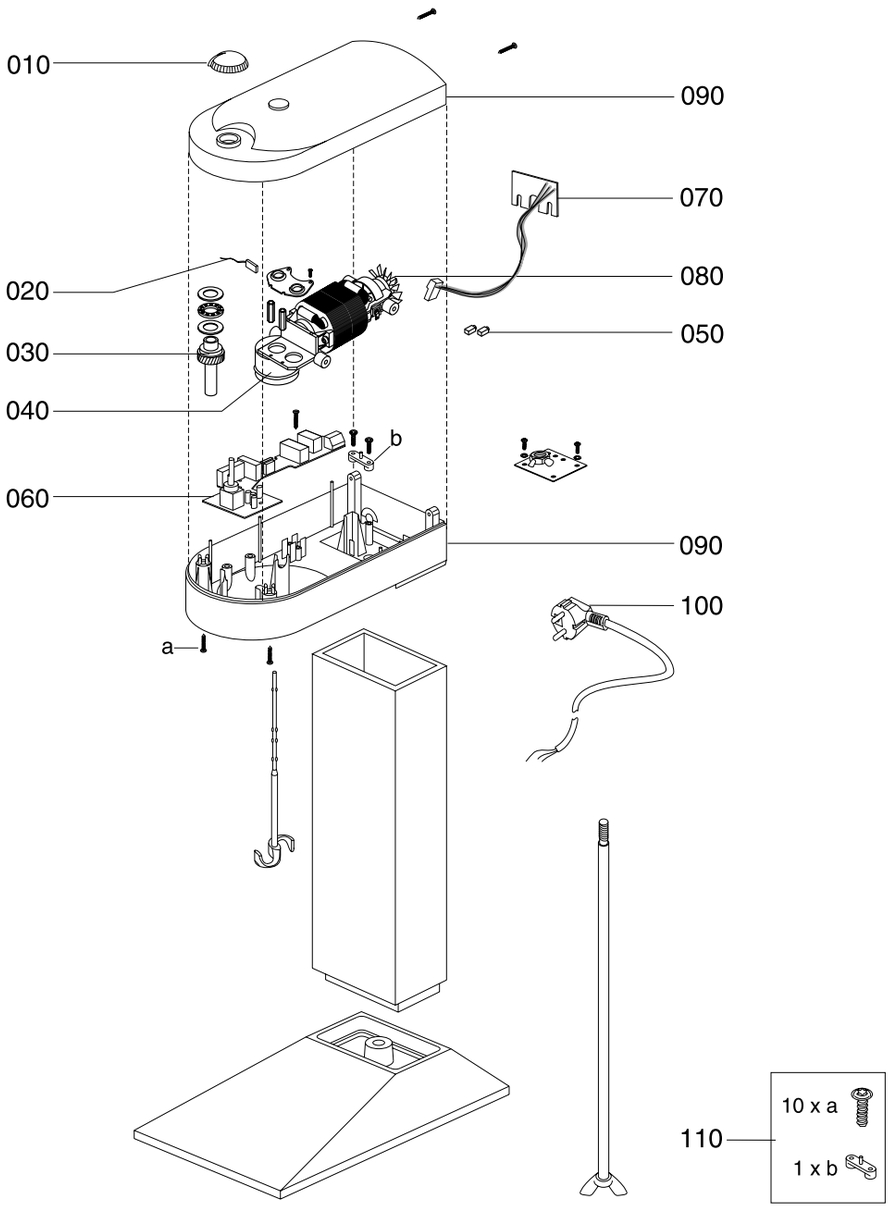

CITO UNGUATOR® B/R:

Machine configuration 230 V 50 cps, Product no. E 100 0110:

Pos.	Description	Spare part-Nr.	Notes
010	Adjusting knob, fitted	B100X190	
020	Temperature limiter	B100X191	
030	Hollow shaft, fitted	B100E270	
040	Motor gear unit	T100X192	
050	2 Brushes	B100X266	
060	Speed controller	B100X193	
070	Hall sensor	B100X194	
080	Ventilator, fitted	B100X195	
090	Housing top	B100X197	
100	Connection cable	B100E100	
110	Small part package	B100X196	

Machine configuration 120 V 50/60 cps, Product no. E 100 0111:

Pos.	Description	Spare part-Nr.	Notes
010	Adjusting knob, fitted	B100X190	
020	Temperature limiter	B100X198	
030	Hollow shaft, fitted	B100E270	
040	Motor gear unit	T100X276	
050	2 Brushes	B100X274	
060	Speed controller	B100X275	
070	Hall sensor	B100X194	
080	Ventilator, fitted	B100X195	
090	Housing top	B100X197	
100	Connection cable	B100E199	
110	Small part package	B100X196	

CITO UNGUATOR® e

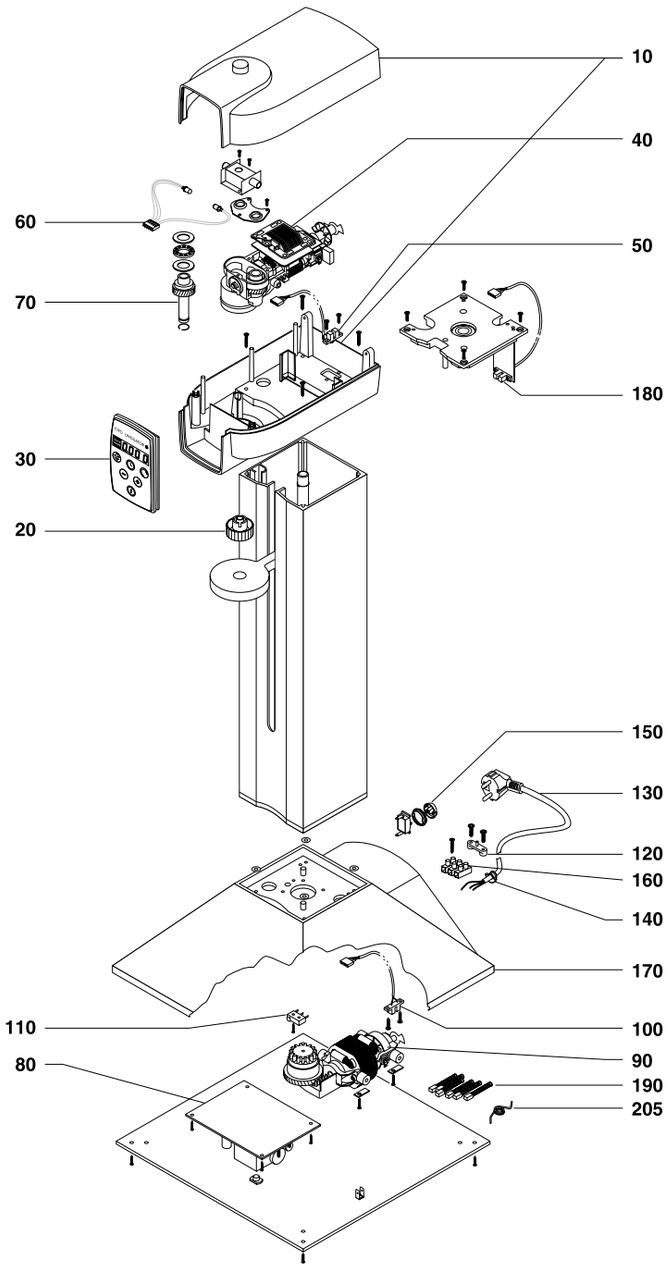

18. Spare Parts CITO UNGUATOR® e

Pos.	Description	Spare parts-Nr. Machine configuration 230 V 50 cps	120 V 50/60 cps	Notes
10	Housing top	B100X150	B100X150	Only with complete replacement.
20	Adjustable sleeve, printed	B100A018	B100A018	
30	Front plate assembly	B100X164	B100X151	
40	Motor gear unit for mixing motor	B100X165	B100X152	
50	Opto-electric guard (mixing motor)	B100X155	B100X155	
60	Transmitter/receiver	B100X156	B100X156	
70	Hollow shaft, complete	B100X163	B100X163	
80	Power circuit board	B100X167	B100X154	
90	Lifting motor	B100X166	B100X153	
100	Opto-electric guard, (lifting motor)	B100X157	B100X157	
110	Sensitive switch	T100E003	T100E003	
120	Cord grip	T060P601	T060P601	
130	Power cord	B100E104	B100E105	
140	Cable gland	T080G010	T080G010	
150	Rocker switch	B100X159	B100X159	
160	Terminal strip	T057E050	T057E050	
170	Base	B100X162	B100X162	
180	Opto-electric machine guard „Start“	B100X158	B100X158	
190	Brushes with springs	B100X160	B100X160	
200	Small part package	B100X013	B100X013	no picture See spare parts list „Small parts“
205	Gear spring	T100S065	T100S065	
210	Styrofoam packaging	T100V110	T100V110	no picture
220	Rollring gear	B100X226	B100X226	no picture

Spare parts list - Pos. „Small parts“

Part description	Product-Nr.	Quantity
Spring ring RW12 DIN 7993	N3577-301	5
Lubricating grease Isoflex NB 52	M1325-026	1g
Polyethylene bag 100 x 150	N5573-210	1
Bag sealing clamp	N3982-000	1
Pan-head tapping screw	N3571-562	10
Ejot DG-Screw DG35x12	N3571-662	20
Plain washer 4,3 DIN 9021 B ST	N3573-003	20
Ejot PT-Screw K30x6	N3571-666	10
Ejot PT-Screw30x10	N3571-661	10
Ejot PT-Screw12	N3571-664	5
Spiral Screw Ejot SF Plus M3x6	N3571-451	10
Lock Washer A3,2	N3573-403	10
Washer 4,3	N3573-006	10
Seeger ring A12	N3573-018	10

Part description	Product-Nr.	Quantity
Counter sinking head screw 3,5x16	N3571-262	10
Ejot PT-ScrewK30x12	N3571-651	20
Hexagon head screw M8x40	N3571-004	10
Pan-head tapping screw 2,9x19	N3571-552	10
Carbon brush (complete)	T329E060	2
Connector for control cable	T100E005	1
Flexible lead to switch – screw terminal	B100L007	1
Switch wire limit	B100L008	1
Flexible lead protective conductor 1	B100L014	1
Flexible lead protective conductor 2	B100L015	1
Flexible lead to switch, power circuit brd.	B100L016	1
Circuit board	B100L017	1

CITO UNGUATOR® e/s

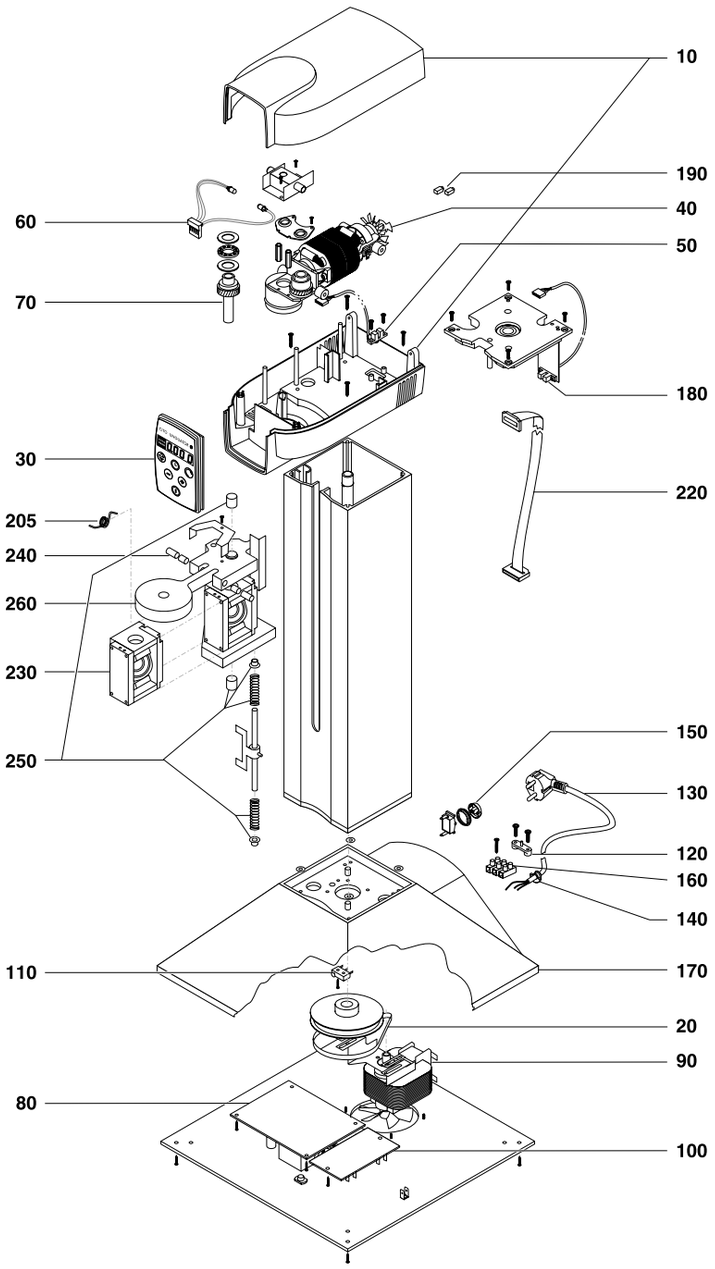

19. Spare Parts CITO UNGUATOR® e/s

Pos.	Description	Spare parts-Nr. Machine configuration 230 V 50 cps	120 V 50/60 cps	Notes
10	Housing top	B100X268	B100X268	Only with complete replacement.
20	Tooth belt	B100X271	B100X271	
30	Front plate assembly	B100X254	B100X256	
40	Motor gear unit for mixing motor	B100X260	B100X261	
50	Opto-electric guard (mixing motor)	B100X258	B100X258	
60	Transmitter/receiver	B100X259	B100X259	
70	Hollow shaft, complete	B100X270	B100X270	
80	Power circuit board	B100X250	B100X251	
90	Lifting motor	B100X263	B100X264	
100	Motor protection board	B100X252	B100X253	
110	Sensitive switch	T100E003	T100E003	
120	Cord grip	T060P601	T060P601	
130	Power cord	B100E104	B100E105	
140	Cable gland	T080G010	T080G010	
150	Rocker switch	B100X159	B100X159	
160	Terminal strip	T057E050	T057E050	
170	Base	B100X269	B100X269	
180	Opto-electric machine guard „Start“	B100X257	B100X257	
190	Brushes with springs	B100X266	B100X267	
200	Small part package	B100X017	B100X017	no picture See spare parts list „Small parts“
205	Gear spring	T100S065	T100S065	
210	Styrofoam packaging	T100V110	T100V110	no picture
220	Control cable	B100X272	B100X272	
230	Rollring gear	B100X226	B100X226	no picture
240	Sliding part/spring	B100X222	B100X222	
250	Pressure spring/bush	B100X223	B100X223	
260	Rollring gear assembly		B100X228	(B100A110)

Spare parts list - Item ”Small parts”

Parts designation	Product No.:	Quantity
Driller self-adhesiv	T100S008	5
Motor noise deadening	T100G010	5
Rubber foot	T100G003	5
Tooth lock washer A3.2	N3573-403	10
Thread pin M5x8	N3571-353	10
Countersunk head screw 3,5x16	N3571-262	10
DG-screw DG35x12	N3571-662	10
PT-screw K30x12	N3571-651	10
DG-screw DG35x10	N3571-669	10
DG-screw DG35x20	N3571-673	10
PT-screw K30x10	N3571-661	10
PT-screw K22x12	N3571-664	10
Spiral screw M3x6	N3571-451	10
Cylinder head screw M4x8	N3571-312	10
Plain washer 4,3	N3573-003	10
Spring ring 4	N3577-205	10
Washer 4,3	N3573-006	10
Plain washer 4,3	N3573-002	10
Fit washer 5/10x0,5	N3573-027	10
Fit washer 5/10x0,2	N3573-026	10
Hexagon socket head screw M4x6	N3571-211	10
Senkschraube mit Innensechskant M4x8	N3571-313	10
Spiral screw M3x8	N3571-454	10
Countersunk head screw M3x8	N3571-316	10
Pan-head tapping screw 2,9x19	N3571-552	10
Seeger circlip ring J32	N3573-427	10
Flexible lead to mixing motor - power circuit board	B100L039	3
Flexible lead to mixing motor - power circuit board	B100L040	3
Flexible lead to thermoswitch of mixing motor - power circuit board	B100L041	3
Flexible lead to thermoswitch of mixing motor - power circuit board	B100L042	3
Flexible lead to switch - screw terminal strip	B100L007	3
Flexible lead to screw terminal strip - supplement plate	B100L012	3
Flexible lead to switch - power circuit board	B100L016	3
Flexible lead to lifting motor - power circuit board	B100L037	3
Flexible lead to lifting motor - power circuit board	B100L038	3
Flexible lead Protective conductor 2	B100L015	3

20. Technical Data

	CITO UNGUATOR® and CITO UNGUATOR® B	CITO UNGUATOR® B/R	CITO UNGUATOR® e
Electrical requirement	230/120/100 V - 50/60 cps	230/120/100 V - 50/60 cps	230/120/100 V - 50/60 cps
Total output	150 W	220 W	250 W
Output (Mixing unit)	150 W	220 W	150 W
„Stand by“	—	—	ca. 4,5 W
Operation mode	KB 5 *)	KB 5 *)	KB 5 *)
Safety class	I	I	I
Type of protection	IP 21	IP21	IP 21
Speed control	variable 500 ... 2000 rpm	variable and electrically controlled 300 - 2000 rpm	electrically controlled in 10 speeds: Level rpm 0 650 1 810 2 970 3 1130 4 1290 5 1450 6 1610 7 1770 8 1930 9 2100
Timer	—	—	electrically variable 0:05 through 9:55 Minutes
Jar sizes	15 - 200 ml	15 - 200 ml	15 - 200 ml (-500 ml)
Weight	6,8 kg	6,8 kg	9,5 kg
Dimensions (L x H x W in mm)	275 x 180 x 500	275 x 180 x 500	300 x 300 x 650
Testing Certification	TÜV Rheinland GS CE	TÜV Rheinland GS CE	TÜV Rheinland GS CE

*) KB 5 = 5 Minutes operation at maximum load and 20 minute cooling period

Technical Data (cont.)

	CITO UNGUATOR® e/s	CITO UNGUATOR® 2000
Electrical requirement	230/100/120 V – 50/60 cps	230/100/120 V – 50/60 cps
Total output	270 W	520 W
Output (oscillation unit)	50 W	50 W
Output (mixing unit)	220 W	470W
Operation mode	KB 5 *)	Continuous operation S1
Safety class	I	I
Type or protection	IP 21	IP 21
Speed control	electrically controlled in 10 speeds: Level rpm 0 720 1 900 2 1080 3 1260 4 1440 5 1630 6 1810 7 1990 8 2160 9 2340	50 ... 3000 rpm a) through internal microprocessors specifications b) through external PC specifications
Timer	electrically variable 0:05 through 9:55 Minutes	internally or externally designated
Jar sizes	15 - 500 ml	15-1000 ml
PC connection (external)	—	Interface RS 232
Weight	9,5 kg	18,5 kg
Dimensions (L x H x W in mm)	300 x 300 x 650	356 x 221 x 642
Testing Certification	TÜV Rheinland GS CE	TÜV Rheinland GS CE

*) KB 5 = 5 Minutes operation at maximum load and 20 minute cooling period

Warranty Certificate

Model type

CITO UNGUATOR® B ☐
CITO UNGUATOR® B/R ☐
CITO UNGUATOR® **e** ☐
CITO UNGUATOR® **e/s** ☐
CITO UNGUATOR® 2000 ☐
(Please check appropriately)

Buying date:

Serial number:

Stamp and signature:

SMS Heiztechnik

SMS Heiztechnik GmbH
Am Köhlersgehäu 50
D-98544 Zella-Mehlis
Germany

After Sales Service:
phone: +49 3682 45 51 99
fax: +49 3682 45 51 06
e-mail: hj.grieser@smszm.de

Maintenance Interval and Contact Carbon change for:

CITO UNGUATOR® B and CITO UNGUATOR® e:

				Date for next service	
Number of preparations (appx)		Service Interval	Carbon change*	Service	Carbons
10/week	2/day	19.2 years	6.2 years		
20/week	4/day	8.1 years	2.5 years		
50/week	10/day	3.8 years	1.3 years		
70/week	14/day	2.7 years	1 year		
100/week	20/day	1.9 years	7.5 months		
300/week	60/day	8 months	3 months		
500/week	100/day	4.5 months	1.5 months		
			*electrician		

Maintenance Interval for:

CITO UNGUATOR® e/s:

Number of preparations (appx)		Service Interval	Date for next service
10/week	2/day	38 years	
20/week	4/day	16 years	
50/week	10/day	8 years	
70/week	14/day	6 years	
100/week	20/day	4 years	
300/week	60/day	1.5 years	
500/week	100/day	1 year	

The recommended maintenance Interval for:

CITO UNGUATOR® 2000

will be calculated automatically and displayed through normal operation
(normal interval, appx 19,900 preparations, see section 7.2.1)

UNGUATOR® TECHNOLOGY

gako International AG

GAKO International AG - Unguator® Technology
Bleicherweg 33 – CH-8002 Zuerich / Switzerland

PHONE: +41 (0) 43 222 42 40, FAX: +41 (0) 43 222 42 41
info@gako-int.com, www.gako-int.com

T100A514 - 0105