Life Sciences

Multi-Well Plate Vacuum Manifold

Description

The Multi-well Plate vacuum manifold is an anodized aluminum manifold that has been designed and optimized for the vacuum filtration of the AcroPrep™ and AcroWell™ lines of multi-well filter plates. The vacuum manifold comes complete with the necessary O-ring and gasket. The control block includes the vacuum pressure gauge, vacuum metering valve, vacuum release valve and the 1/4 inch hose barb for vacuum line attachment. Included with the vacuum manifold unit is a Delrin spacer block designed to accommodate standard 350 µL receiver plates. The spacer block has been optimized to reduce the space between the receiver plate and the filter plate during vacuum filtration. A spacer block that has been optimized to work with our 1 mL plate is available separately. An accessory kit that contains an additional O-ring, gasket and allen wrench is also included with the vacuum manifold unit.

Ordering Information

Prod. No.	Description	Packaging
5017	Multi-well Plate Vacuum Manifold	1/pkg
5014	1 mL Receiver Plate Spacer Block	1/pkg
5015	350 µL Receiver Plate Spacer Block	1/pkg
5016	Replacement Accessory Kit (Includes O-Ring, gasket and allen wrench)	1/pkg

Note: the 350 µL Receiver Plate Spacer Block can be used to accomodate 384 well receiver plates as well.

Specifications

Materials of Construction
Vacuum Manifold: Anodized aluminum
Gasket: EDPM (Ethylene propylene)
O-ring: Silicone
Spacer blocks: Delrin

Dimensions
Length: 17.48 cm (6.88 in)
Width: 12.37 cm (4.87 in)
Height: 8.05 cm (3.17 in)
Weight: 6.27 lbs

Maximum Operating Vacuum
71.12 cm Hg (28 in Hg).

Note: The multi-well plate vacuum manifold can be used with multi-well filter plates that meet the specifications set forth by the Society for Biomolecular Screening (SBS).

Instructions for Use

To set the vacuum manifold to a desired negative pressure setting prior to filtration, follow the steps listed below.

1. Switch the on/off valve to the off position (See Figure 3).
2. Attach the vacuum line to the 1/4 inch hose barb.
3. Place a receiver plate on top of the vacuum manifold.
4. Turn on the vacuum pressure. You may need to press lightly on the receiver plate to engage the vacuum seal.
5. Adjust the negative pressure to the desired setting by adjusting the metering valve.
6. Turn off the vacuum pressure and remove the receiver plate. The vacuum manifold is now set at the desired setting.

To filter the AcroPrep or AcroWell filter plates follow the steps listed below.

1. If collecting the filtrate, remove the top chamber of the vacuum manifold. The indentations on the sides of the manifold allow for the top portion of the manifold to be easily removed. If collecting the retentate, skip to step 3.
2. Place the appropriate spacer block into the lower chamber of the vacuum manifold. The vacuum manifold can be used with any size receiver plate.

   350 µL receiver plates: To use a 350 µL 96 well or 384 well receiver plate, place the large spacer block (PN 5015) into the lower chamber of the vacuum manifold. Place the 350 µL 96 well or 384 well receiver plate on top of the spacer block.

   1 mL receiver plates: To use 1 mL receiver plates, place the small spacer block (PN 5014) into the lower chamber of the vacuum manifold. Place the 1 mL receiver plate on top of the spacer block. (You can also use a standard 350 µL receiver plate in place of the 1 mL spacer block.)

   2 mL receiver plates: To use 2 mL receiver plates, place the 2 mL receiver plate directly into the lower chamber of the vacuum manifold.

Instructions for Use (cont.)

3. Before replacing the top chamber of the vacuum manifold, ensure that all surfaces are free from dirt, debris and any particulate matter that may have accumulated on the vacuum manifold, O-ring and gasket.

   Note: If the O-ring and gasket are not clean, you will not obtain a proper seal.
4. Replace the top chamber of the vacuum manifold.
5. Place the filter plate on the gasket located on the top chamber of the vacuum manifold. Ensure that the gasket is clean.
6. Ensure that the on/off switch is in the position (See Figure 3).
7. Connect the vacuum line to the 1/4 inch hose barb.
8. When ready to evacuate the filter plate, turn the on/off switch on the vacuum manifold to the on position. You may need to press lightly on the filter plate to engage the vacuum seal.
9. The wells will begin to evacuate/empty once the vacuum has been applied to the chamber.
10. If you need to adjust the vacuum pressure up or down, adjust by moving the metering valve located to the right of the vacuum pressure gauge.
11. When all of the wells have completely evacuated, turn the on/off valve to the off position. To release the residual vacuum pressure that remains in the chamber, push the release valve located to the left of the vacuum gauge. The release valve will allow the pressure within the manifold chamber to return to atmospheric pressure and reduce the potential for cross contamination and spraying of the filtrate. **Do not release the vacuum by pulling the corner of the plate as it will degrade the manifold gasket.** You can also tap the top of the filter plate prior to removing it to release any hanging drops that may be attached to the outlet tips.
12. Remove the filter plate and place it aside for further processing or dispose of properly.
13. If collecting the filtrate, remove the top chamber of the vacuum manifold from the lower portion of the vacuum manifold.
14. Remove the receiver plate from the lower chamber of the vacuum manifold and utilize the filtrate for further processing.

To replace the O-ring follow the steps below.

1. Remove existing O-ring from the bottom of the upper chamber.
2. Ensure that the new O-ring and O-ring groove are free from dirt, debris and particulate matter.
3. Place new O-ring into place.

To replace the gasket follow the steps below.

1. With the allen wrench provided, remove the 12 screws located on the bottom portion of the upper chamber.
2. Separate the top ring from the bottom section of the upper chamber.
3. Remove the old gasket and clean the gasket pocket area of any dirt and debris.
4. Place the new gasket into the gasket pocket. Place the top ring back onto the bottom section of the upper chamber. Ensure that the alignment posts on the bottom section fit into the alignment holes in the top ring.
5. Invert the upper chamber and replace the 12 screws.
6. Lightly tighten the four corner screws with the allen wrench, then tighten all 12 screws. Once this is completed recheck the screws with the allen wrench to ensure all screws are tightly secured.
7. The manifold is now ready for use.

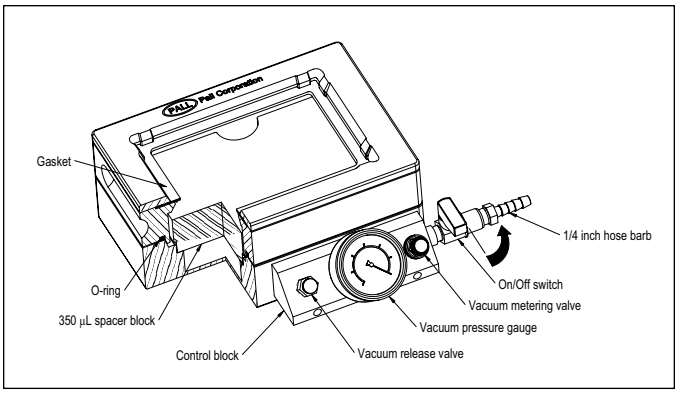

Figure 1

Instructions for Use (cont.)

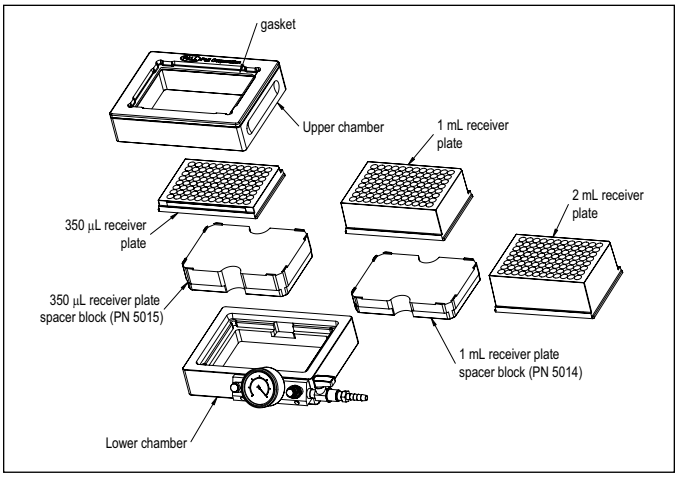

Figure 2

Note: A 384 well receiver plate can be interchanged with the 350 µL receiver plate if using a 384 well filter plate.

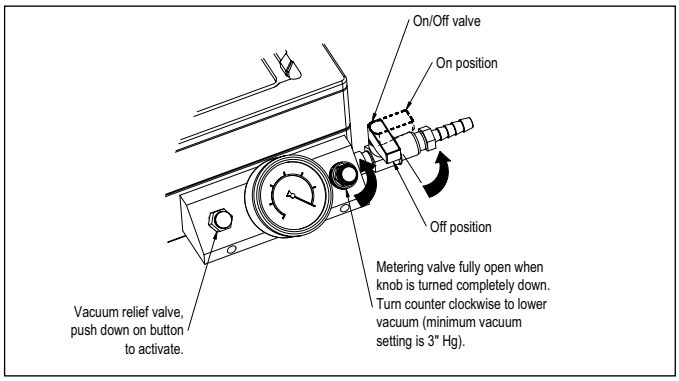

Figure 3

Complementary Products

AcroWell™ 96-well Filter Plates with BioTrace™ NT and BioTrace PVDF Membranes exhibit high binding capacities for proteins and nucleic acids.

AcroPrep™ 96 and 384-well Filter Plates are an excellent platform for a wide variety of molecular biology, analytical and high throughput sample preparation and detection applications.

WARNING

Employment of the products in applications not specified, or failure to follow all instructions contained in this product information insert, may result in improper functioning of the product, personal injury, or damage to property or the product. See Statement of Warranty in our most recent catalog.

Pall Life Sciences
600 South Wagner Road
Ann Arbor, MI 48103-9019 USA

For ordering or technical information:
Tel: 734-665-0651
800-521-1520 (in USA)
Fax: 734-913-6114

Visit Pall Life Sciences on the Internet: www.pall.com/Lab or e-mail us at: Lab@pall.com

Offices:
Australia, Lane Cove, NSW, 02-9428 2333
Austria, Wien, 043-1-49 192 0
Canada, Ontario, 905-542-0330
Canada, Québec, 514-332-7255
China, P.R., Beijing, 86-10-8458 4010
France, St. Germain-en-Laye, 01 30 61 39 92
Germany, Dreieich, 06103-307 333
India, Mumbai, 91-22-5956050
Italy, Milano, 02-47-79-61
Japan, Tokyo, 3-3495-8319
Korea, Seoul, 2-569-9161
Poland, Warszawa, 22-811 12 83
Russia, Moscow, 095 787-76-14
Singapore, 65-389-6500
Spain, Madrid, 91-657-9876
Sweden, Lund, 46-0-46 15 84 00
Switzerland, Basel, 061-638 39 00
Taiwan, Taipei, 2-2545-5991
United Kingdom, Portsmouth, 023 92 302600

PN 88293A