User's Manual

Model SC72
Personal Conductivity Meter

IM 12D03D02-01E

vigilantplant®

YOKOGAWA
Yokogawa Electric Corporation

IM 12D03D02-01E
3rd Edition

Preface

Before using the Model SC72 Personal Conductivity Meter, read this manual thoroughly.

For safe use of this meter, the meter and the instruction manual include the following symbol marks.

WARNING : Indicates that serious injury may result, if users fail to follow instruction manual procedures.

CAUTION : Indicates that minor injury to personnel, or serious damage to the product, may result if users fail to follow procedures in the instruction manual.

WARNING

Do NOT use this instrument where there is a possibility of electrical shock.

Do NOT touch any part of the electrode immediately after measuring very hot liquids — otherwise, you may get burnt.

CAUTION

If the meter will not be used for an extended period of time, be sure to remove the battery. Otherwise battery leakage may occur, and may cause damage to the meter or cause erroneous meter operation.

The contents of this manual are subject to change without prior notice.

Yokogawa Electric Corporation assumes no liability for damage, defects, or loss of the product caused by any of the following:

User error;

Inappropriate or out-of-specifications use of the product;

Use in an unsuitable environment;

Repair or modification of this or related products by persons other than Yokogawa-authorized engineers.

IM 12D03D02-01E
3rd Edition: Aug. 2009 (YK)

Liquid crystal display (LCD) display characters

The numeric LCD display is used to mimic alphabetic characters, as shown below:

Alphabet	Display	Alphabet	Display	Numerals	Display
A	A	N	n	0	0
B	b	O	o	1	1
C	C	P	P	2	2
D	d	Q	q	3	3
E	E	R	r	4	4
F	F	S	S	5	5
G	G	T	t	6	6
H	H	U	U	7	7
I	I	V	V	8	8
J	J	W	u	9	9
K	K	X			
L	L	Y	y		
M	n̄	Z	z		

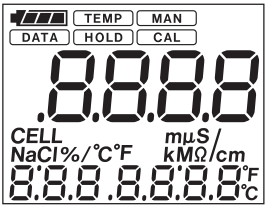

All display elements shown ON

F00.EPS

Note Regarding Panels Shown in this Manual:

Panels shown in this manual should be regarded as examples. Actual panel format may vary depending on parameter settings and on type of connected sensor.

Showing all display elements lit

Display (gray represents flashing state)

Flashing state: 

Lit state: 

Warranty and Service

Yokogawa products and parts are guaranteed to be free from defects in workmanship and materials under normal use and service for a period of (typically) 12 months from the date of shipment from the manufacturer.

Individual sales units may offer different warranty periods, so the original purchase order should be consulted for the conditions of sale. Damage caused by normal wear and tear, inadequate maintenance, corrosion, or due to chemical processes, is excluded from this warranty coverage.

In the event of a warranty claim, any items that are considered to be defective should be sent (freight paid) for repair or replacement (at Yokogawa discretion) to the service department of the relevant sales unit. The following information must be included in a letter accompanying the returned items:

- Model code and serial number
- Copy of original purchase order showing the date
- Length of time used, and the measuring environment
- Fault symptoms, and circumstances of failure
- Statement whether service under warranty or out-of-warranty service is requested
- Complete shipping and billing instructions for return of goods, plus the name and phone number of a contact person who can be reached for further information

Goods that have been in contact with process fluids must be decontaminated / disinfected before shipment, and a statement to this effect should be included. Safety data sheets for all process components that the goods have exposed to should also be included.

CONTENTS

1. Outline

The Model SC72 Personal Conductivity Meter is an accurate, portable, easy-to-use conductivity meter. It includes not only self-diagnostic functions, to help ensure validity of readings, but also data storage functions to allow users to check past data. The meter is of waterproof construction so that it can safely be used outdoors on a rainy day, and can also withstand being accidentally dropped into water.

1.1 Features

Water resistant case

When this meter is used with its dedicated sensor, it meets the requirements of class IP67 "Degree of Protection to be Provided by Enclosures" in IEC 60529.

Wide measurement range, and convenient "Auto Range" function

Sensors are available to cover measurement ranges between 0 to 2.000 μS/cm and 0 to 2 S/cm. Auto-range functions automatically set the optimum measurement range, making measurement easy.

Automatic temperature compensation

Automatic temperature compensation functions are provided for liquid measurement. Conductivity referenced to 25°C can be obtained in solutions with temperature coefficients between 0.00 and 9.99%/°C. The temperature coefficients for NaCl solutions are already stored in the meter.

Calendar and time functions

Internal time functions allow "one-touch checking" of measurement date and time.

Data storage function

Up to 300 conductivities and temperature measurements, and their measurement date and time, can be saved. This function allows you to check past measurement data.

Automatic power off function

The meter will power off automatically if not operated during a preset time interval.

The time interval can be set in one-minute increments in the range 1 to 120 minutes to meet your application requirements. This automatic power off function can also be disabled, but it is wise to leave it enabled to conserve the batteries.

Simple alarm clock function

The meter can issue an alarm signal at a specified time. Even when meter power is turned off, the internal clock can issue an alarm signal.

Internal self-diagnostic functions display messages when appropriate.

Bright easy-to view large LCD

Displays liquid conductivity, liquid temperature, temperature coefficient, date and time.

1.2 Personal Conductivity Meter Specifications

Applicable measurement range:

- Sensors for high purity water measurement (cell constant: 0.05 cm^{-1})

  Conductivity: 0 to 2μS/cm, 0 to 20μS/cm, 0 to 200μS/cm, 0 to 40MΩ•cm

  Temperature: 0 to 80℃*1

- For general-purpose sensors (cell constant: 5 cm^{-1})

  Conductivity: 0 to 20μS/cm, 0 to 200μS/cm, 0 to 2mS/cm, 0 to 20mS/cm, 0 to 200mS/cm,

  Temperature: 0 to 80℃*1

- For chemical-corrosion-resistant sensors (cell constant: 5 cm^{-1})

  Conductivity: 0 to 20μS/cm, 0 to 200μS/cm, 0 to 2mS/cm, 0 to 20mS/cm, 0 to 200mS/cm

  Temperature: 0 to 80℃*1

- Sensors for high-conductivity measurement (cell constant: 50 cm^{-1})

  Conductivity: 0 to 2mS/cm, 0 to 20mS/cm, 0 to 200mS/cm, 0 to 2S/cm

  Temperature: 0 to 80℃*1

Resolution: Conductivity: Least significant digit: 1 digit;

Temperature: 0.1℃

Repeatability (Conductivity):

±2% (±5% for general-purpose sensor on 0 to 200mS/cm measurement range)

Accuracy (Temperature): ±0.7℃ (in the range 0 to 70℃)

±1℃ (when exceeding 70℃)

Temperature compensation range:

variable 0.00 to 9.99%/℃, also (preset) NaCl solution temperature coefficient

Measurement converted to conductivity at standard temperature of 25℃

Measured liquid temperature: 0 to 80℃ (0 to 50℃ when the sensor cable is immersed in water)

Ambient temperature:0 to 50℃

Construction: IEC 60529, IP67 class of protection from environment

Power requirement: Two of size AA batteries (LR6)

Automatic power off interval: May be set in range 1 to 120 minutes

Battery life: About 200 hours of continuous use, for long-life alkaline battery (life may vary depending on battery type and ambient conditions)

External dimensions: Approximately 150 (H) x 61 (W) x 42 (D) mm (not including protruding portions)

Weight: Approximately 220 g (including batteries)

*1: Display range is from -10 to 120℃.

EMC Compliance:

EMI (Emission): EN 61326-1 Class B

Test Item	Frequency Range	Basic Standard
Electromagnetic radiation disturbance	30 to 1000 MHz	CISPR 16-1 and 16-2

T0101.EPS

EMS (Immunity): EN 61326-1 Table 2 (For industrial locations)

No.	Test Item	Test Specification	Basic Standard	Performance Criteria*
1	Electrostatic discharge	4 kV (contact) 8 kV (air)	IEC 61000-4-2	A
2	RF amplitude modulated electromagnetic field	80 to 1000 MHz, 10 V/m (unmodulated) 80% AM (1 kHz)	IEC 61000-4-3	B**
		1.4 to 2.0 GHz, 10 V/m (unmodulated) 80% AM (1 kHz)		A
		2.0 to 4.0 GHz, 3 V/m (unmodulated) 80% AM (1 kHz)		A

* A: Normal performance within the specification limits: ±20% of the measured value.
B: Temporary degration or less of function or performance which is self-recoverable.
** Display value may be affected by strong electromagnetic field.

T0102.EPS

1.3 When You Receive This Conductivity Meter

Confirm that all SC72 meter package components (refer to Contents of Model SC72 Personal Conductivity Meter Package in Section 1.4 and sensor models described in Sec. 1.6, “Sensor Part Names and Functions.”) have been received. Carefully inspect the meter and sensor, referring to Section 1.5, “Component Names and Functions” when assembling meter and sensor.

Particular attention should be taken:

* Not to twist or force the cable.
* Not to hit or drop the meter.
* Not to get the sensor connector dirty.

1.4 Contents of Model SC72 Personal Conductivity Meter Package

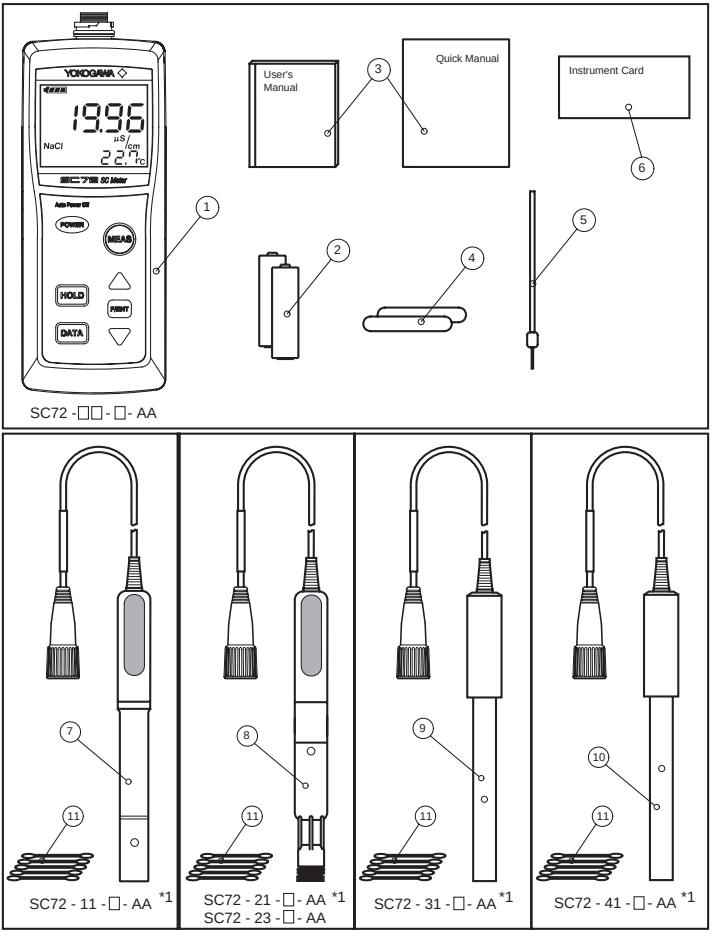

Model	Suffix code	Specification
SC72	----------	Personal conductivity meter
Sensors	-00	Meter only, without sensor
	-11	With sensor for high purity water measurement (cable length: 0.75m)
	-21	With general-purpose sensor (cable length: 0.75m)
	-23	With general-purpose sensor (cable length: 3m)
	-31	With chemical-resistant sensor (cable length: 0.75m)
	-41	With sensor for high-conductiivity measurement (cable length: 0.75m)
Label language	-J	Japanese
	-E	English
-	-AA	Always -AA

No.	Name
1	Personal conductivity meter
2	Two dry batteries
3	Two instruction manual
4	Non-slip pads (two)
5	Hand strap
6	Instrument card
7	Sensor for high purity water measurement
8	General-purpose sensor
9	Chemical-resistant sensor
10	Sensor for high-conductivity measurement
11	Sensor cleaner (five cotton swabs)

*1 The meter model number and cell constants, as well as the sensor model no. (SC72SN-□-AA), are shown on the nameplate.

F010401.EPS

1.5 Component Names and Functions

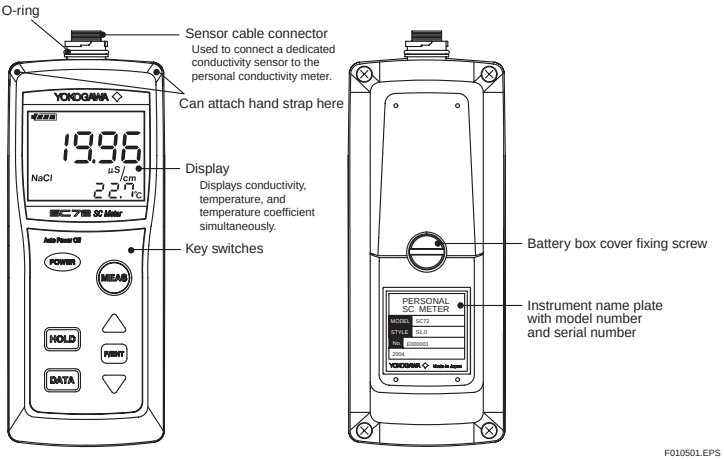

1.6 Sensor Part Names and Functions

Four types of sensors are available for use with the Model SC72 Personal Conductivity Meter:

(1) sensor for high purity water measurement (cell constant 0.05 cm^{-1}),

(2) general-purpose sensor (cell constant 5 cm^{-1}),

(3) chemical-resistant sensor (cell constant 50 cm^{-1}), and

(4) sensor for high-conductivity measurement (cell constant 50 cm^{-1}). Check the model number and cell constant on the name plate to confirm which type of sensor you have.

Model number and cell constants display plate example

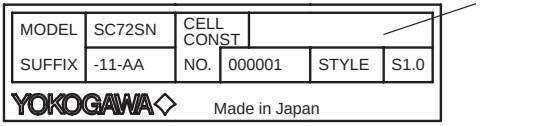

SC72SN Conductivity sensors for personal conductivity meter

Model	Suffix code	Specification	Remarks*1
SC72SN	--------	Conductivity sensor for personal conductivity meter	
	-11	For SC72; for high purity water measurement (cable length: 0.75m)	
	-19	For SC82; for high purity water measurement (cable length: 0.75m) *2	K9221XB
	-21	For SC72; for general purpose type (cable length: 0.75m)	
	-23	For SC72; for general purpose type (cable length: 3m)	
	-29	For SC82; for general purpose type (cable length: 0.75m)*2	K9221XA
	-31	For SC72; for chemical-resistant type (cable length: 0.75m)	
	-39	For SC82; for chemical-resistant type (cable length: 0.75m) *2	K9221XC
	-41	For SC72; for high conductivity measurement (cable length: 0.75m)	
	-49	For SC82; for high conductivity measurement (cable length: 0.75m) *2	K9221XD
	-AA	Always -AA	

*1: Part number of SC82 (previous model).

*2: Waterproofing is not guaranteed if you use SC82-type conductivity sensor in conjunction with SC72 meter.

F010601.EPS

Sensor for high purity water measurement

SC72 - 11 - □ - AA *1

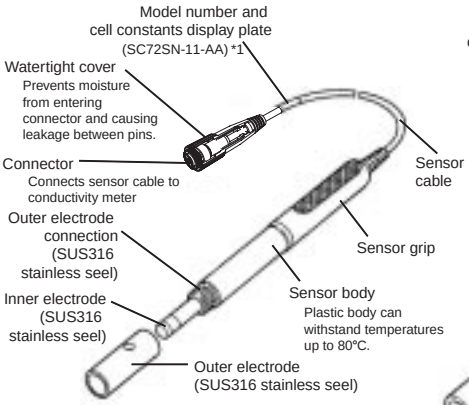

General-purpose sensor

SC72 - 21 - □ - AA *1
SC72 - 23 - □ - AA

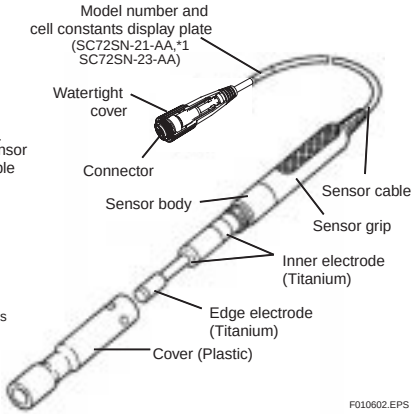

F010602.EPS

Chemical-resistant sensor

SC72 - 31 - □ - AA *1

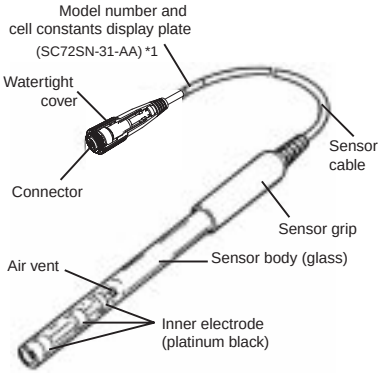

Sensor for high-conductivity measurement

SC72 - 41 - □ - AA *1

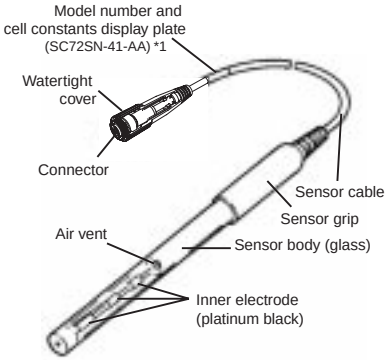

*1 SC72SN-□ will be described on sensor's name plate for the model number.

F010603.EPS

1.7 Options (Available Separately)

The following options are available for the Personal Conductivity Meter for your convenience. When ordering, specify part number shown below.

Standard solution (Part no.: K9221ZA)	Soft case (Part no.: B9269KJ)	Sensor stand (Part no.: K9220XN)
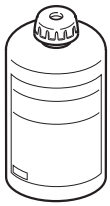	Unit: mm 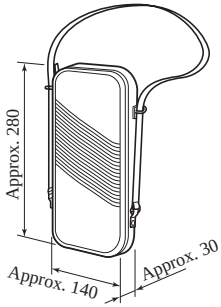	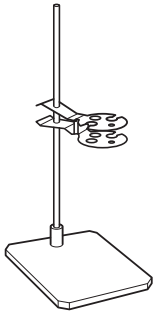
0.1mol/l NaCl solution for calibration (250ml)	This soft black carrying case holds conductivity meter and sensor.	This stand holds the sensor when the conductivity meter is used on a table. It is made of rustproof stailess steel.

F010701.EPS

1.8 Spare Parts

O-rings and gaskets are important parts to ensure that the SC72 meter is water resistant. Replace these parts as required. Refer to Section 5.5, “Storage and Maintenance” for replacement.

O-ring and gasket set (Part no.: K9654AY)
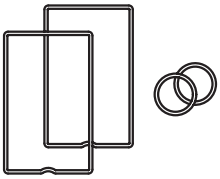
Two battery box gaskets Two sensor connection O-rings

F010801.EPS

2. Preparation

2.1 Installing the Batteries

Install the batteries first.

CAUTION

Select a relatively moisture-free location when installing batteries in the meter.

When installing batteries, observe correct polarity (battery orientation). Failure to do so may damage to the meter.

Remove batteries from the meter if it is to be stored for an extended period of time.

Do not leave dead batteries in the meter. They may leak and cause meter failure or erratic operation of the meter.

When replacing batteries, replace both batteries at the same time. If only one battery is replaced, the new battery may discharge into the old battery, which may leak chemicals and damage the meter.

If the battery box gasket is damaged or dirty then the unit may no longer be waterproof; replace the gasket in this case.

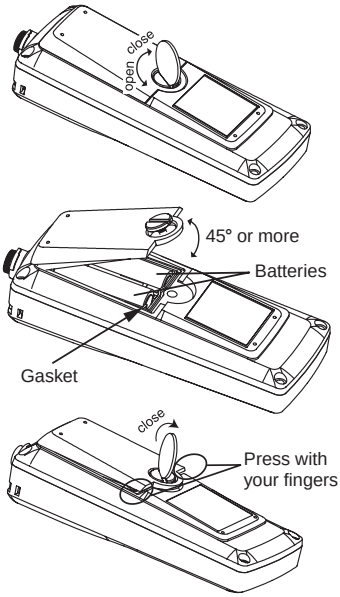

(1) Loosen the screw holding the battery box cover using a coin or similar object.

(2) Remove the battery box cover, and then install the batteries observing polarity diagram inside.

(3) Make sure the gasket on the inside rim of the battery box is free of foreign material.

(4) Put the cover back on. Insert the tabs on the top of the cover into the slots at an angle of at least 45° and lower the cover into position.

(5) Press the both ends of the cover down with your fingers and tighten the screw to fix the cover onto the unit using a coin or similar object.
Note: Do not attempt to tighten further when you feel resistance before the cover is fastened in place. Loosen the screw once and retighten.

F020101.eps

2.2 Connecting Sensor Cable

Connect the sensor cable as shown below.

CAUTION

Select a relatively moisture-free location when connecting the sensor cable.

When connecting the sensor cable, tighten by turning only the silver locknut, do not turn the cable or waterproof cover. Also take care not wet or contaminate the connector.

Model SC82 sensors can be connected, but these are not guaranteed to be waterproof when used with this meter.

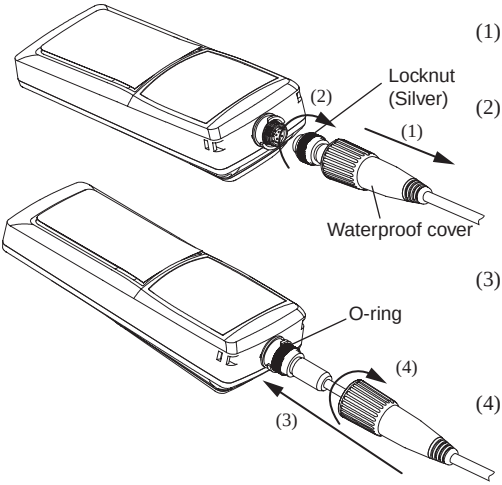

(1) Pull the waterproof cover along the sensor cable away from the connector to expose the locknut.

(2) Connect the connector to the meter body*. Then tighten firmly by turning only the locknut.

* Align the slots of the sensor cable connector with the posts of the connector on the meter.

(3) Move the waterproof cover toward the connector until it contacts with the O-ring* on the meter body.

* Make sure that the O-ring is free of foreign material.

(4) Push and rotate the waterproof cover 1/4 turn (90 degrees) clockwise to lock into place.

F020201.eps

Caution: It is recommended that, as far as possible, you leave the sensor connected to the meter to help ensure that the connector does not get dirty.

2.3 Setting Date and Time

After installing the batteries, set the date and time. Note that if the power is turned off before setting “minutes,” start with the date setting when you turn on the power next time.

If you replace the batteries, the date is not affected, but the time is reset. Reenter the time.

Caution: If the sensor is not connected then an error will be displayed on the meter.

• Setting method

After installing batteries, press and hold the POWER key for at least one second. Then all display elements turn on and the date setting display automatically appears. Set year, month, day, hours, and minutes as follows:

Caution: If you stop part way through the date and time setting then the meter will beep and the date and time will not be updated.

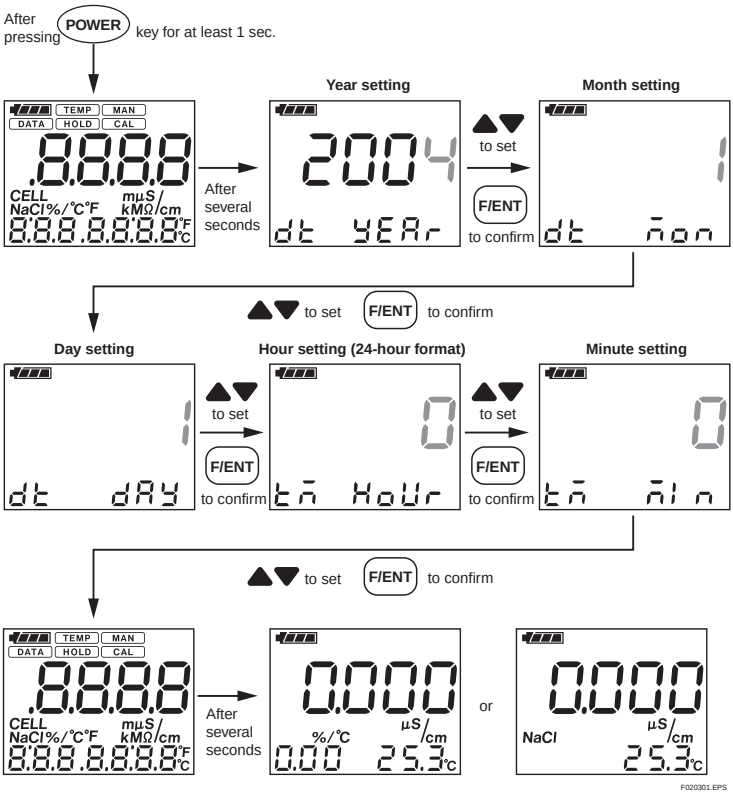

2.4 Setting Temperature Unit

Default temperature units are °C. To change to °F, refer to Sec. 4.3 (13) Set temperature units (tP.U) panel.

2.5 Setting Cell Constant

Even for sensors of the same type, each sensor has its own distinct cell constant. So, set the proper cell constant as indicated on the sensor cable.

Whenever sensors are replaced, be sure to change the cell constant setting in the meter accordingly. Cell constants once set are stored in non-volatile memory and are not lost even when the batteries are replaced.

• Setting cell constants

Press the F/ENT key to switch to function mode. Then select the C.C display with the ▲▼ key and access the cell constant setting display with the F/ENT key. Use the ▲▼ key to set the cell constant, then press the F/ENT key to confirm it.

Refer to Sec. 4.3 (4).

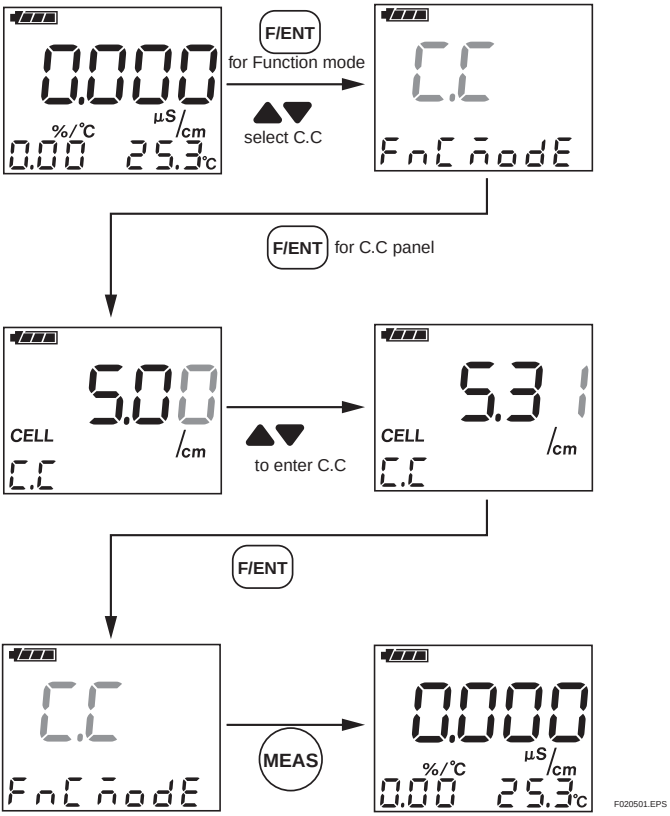

You can abort this procedure at any time by pressing MEAS to revert to measurement mode.

2.6 Setting Temperature Compensation Coefficient

As described in Section 7.3, liquid conductivity varies with liquid temperature. Therefore, if concentration is measured by conductivity, the conductivity must be converted to equivalent conductivity at a certain temperature. This instrument incorporates standard temperature conversion functions to convert liquid conductivity measurements to equivalent conductivity at 25°C. To display equivalent liquid conductivity at 25°C, set the temperature compensation coefficient as described in this section.

Temperature coefficient for NaCl solutions is stored in this instrument. If any other solution is used, set the temperature compensation coefficient manually.

Refer to Sec. 4.3 (2) Temperature compensation setting (t.Co) panel.

• **Set the temperature compensation coefficient**

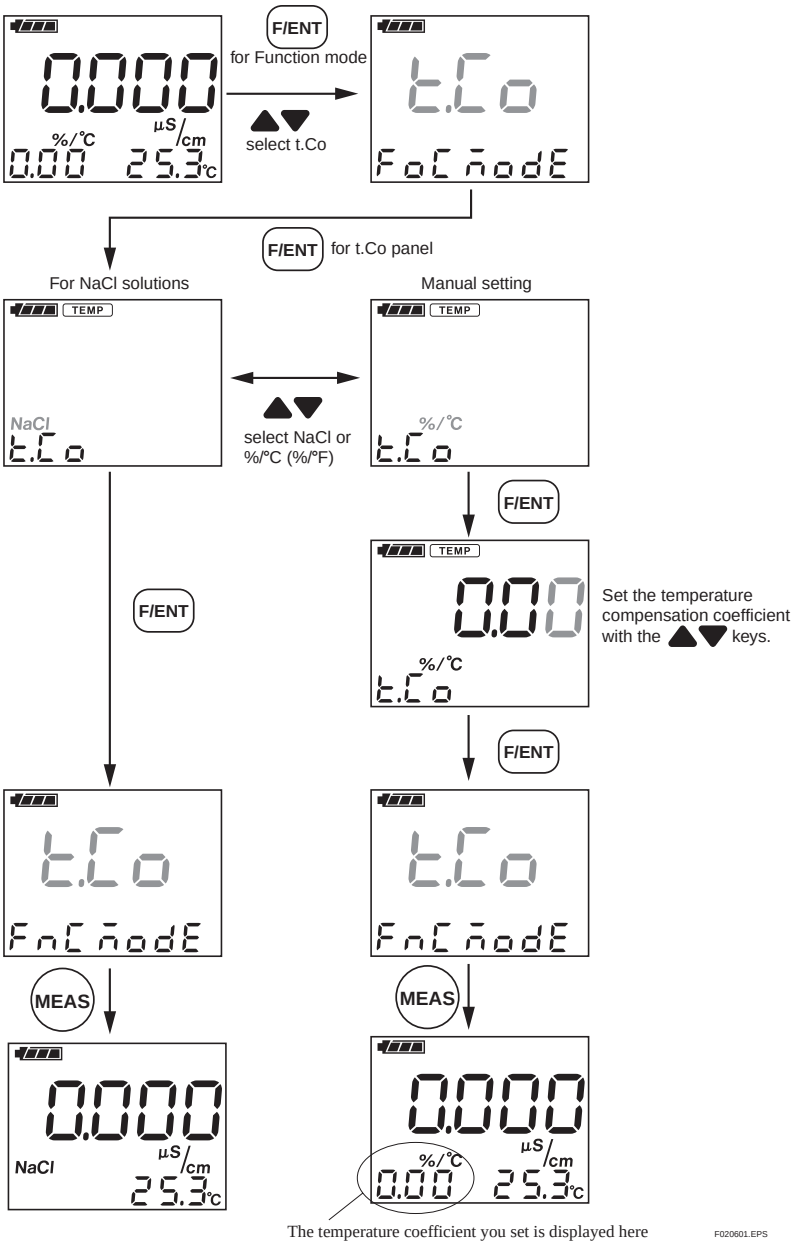

3. Measurement

3.1 Precautions

(1) Be sure to check that the cell constant and the temperature coefficient are set correctly.

(2) Check that the plastic cover (for general-purpose sensor) and outer electrode (for high purity water measurement) are secure.

(3) Do not use the SC72 meter to measure liquids with temperatures over 80°C. (If the sensor grip is immersed, liquid temperature shall be below 50°C.) Do not use the meter to measure extremely corrosive liquids such as solutions of hydrofluoric acid.

(4) Remove dirt and stains from the meter with soft tissue. If necessary, wipe the meter case with neutral detergent.

(5) If any problem with the meter arises during measurement, refer to the Troubleshooting section later in this manual to determine the cause.

(6) After finishing measurement, flush stains on the sensor and measured solutions with water, and store the meter (refer to Chapter 5, “Handling of the SC72 Personal Conductivity Meter”).

When the meter is used on a table:

The meter is designed as a portable instrument; however, to use it on a table, attach non-slip pads (supplied with the instrument) at top and bottom of the meter to stop it from moving when the sensor is moved.

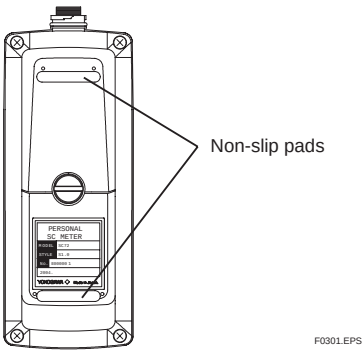

Figure 3.1 Position of Non-slip Seats

3.2 Measurement Procedures

Dipping sensor into liquid

To help avoid errors due to air bubbles around the sensor element (inner electrode), immerse the sensor into the liquid to be measured so that its air vent is below liquid level. To dislodge any air bubbles from the inner electrode, dip the sensor into the liquid and move it up and down two or three times.

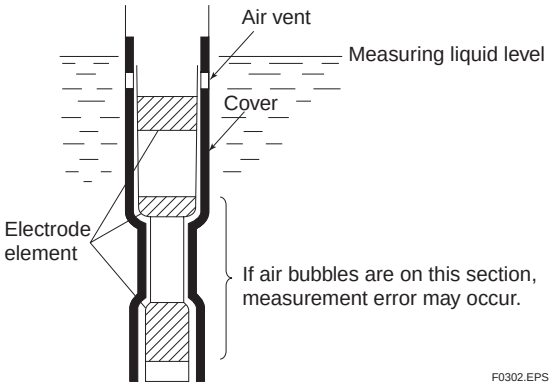

Figure 3.2 Dipping Sensor in Liquid (for general-purpose sensors)

3.3 Measurement Panel

Immerse the sensor into the liquid to be measured to display the liquid conductivity on the LCD display.

There are three measurement panel display types: the standard display, calendar, and clock display.

Use the MEAS key to toggle the display type.

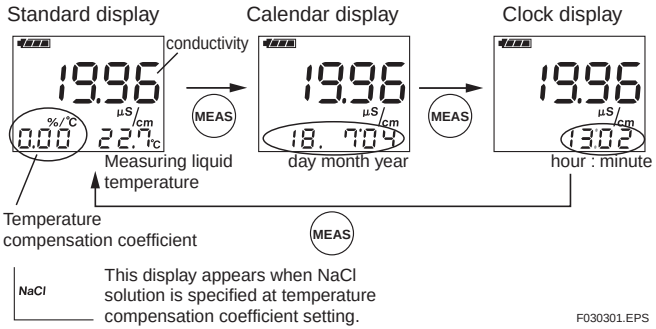

3.4 Saving Measured Value

The meter offers two ways of storing measured values: HOLD for temporary storage and non-volatile data storage that retains data even if batteries are removed.

(1) HOLD

If the HOLD key is pressed during measurement, the measured values are temporarily held (display no longer changes).

Press the HOLD key or MEAS key to return to the measurement mode.

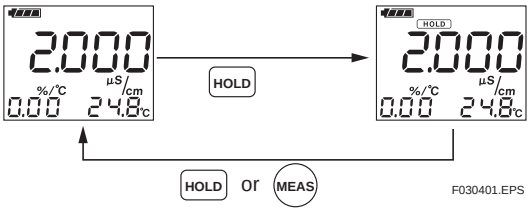

(2) Data storage

If the DATA key is pressed during measurement, DATA mark starts flashing. Press the F/ENT key, then currently measured data can be stored in nonvolatile memory. Data stored are measured conductivity, measured temperature, date and time. Up to 300 data including individually deleted data can be stored. If you attempt to store more data, FULL is displayed.

If FULL is displayed even though the number of data stored is less than 300, perform "defrag" [refer to Section 4.3 (15), "Defragment storaged data (DFLG) panel"]. By doing so, you can increase the number of data to be stored.

To check stored past data, refer to 4.3 (1) dAt (display stored measurement value) later in this manual.

While DATA is flashing, press the DATA key or MEAS key to return to measurement mode without storing data.

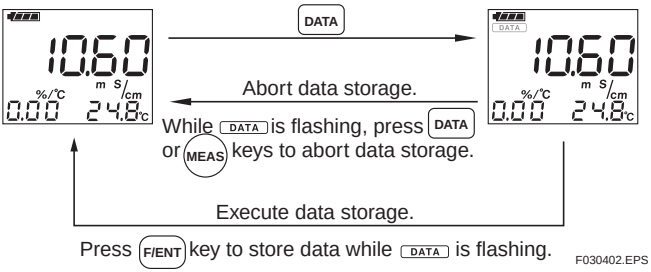

4. Keyswitch Functions

There are seven membrane keys on the keyboard of the Personal Conductivity meter. The following key functions are provided.

* Display the conductivity, measured temperature and temperature coefficient.
* Display the conductivity, date and time.
* Hold conductivity and temperature measurements.
* Store conductivity and temperature measured data.
* Other functions such as parameter setting.

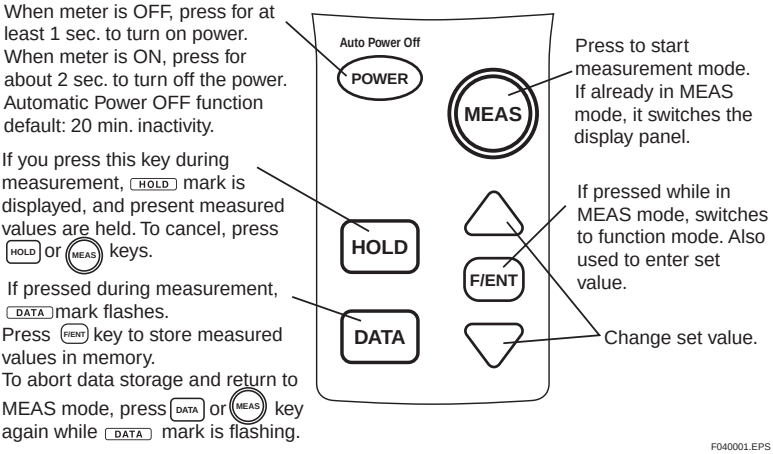

4.1 Names and Functions of Keys

POWER : Power ON/OFF key

If nothing is displayed on the LCD, hold down this key for about one second or more to turn the power on.

If something is displayed on the LCD, pressing and holding this key for about two seconds turns power off. If no keys are pressed during a certain time interval, power turns off automatically (refer to “A.oFF,” Set Auto Power Off Interval of Section 4.3 (10)).

HOLD : HOLD key

Press the HOLD key to hold the currently-displayed conductivity and temperature measurement values (HOLD mark turns on).

Press the HOLD key or MEAS key again to return to measurement mode and turn HOLD mark off.

DATA : Data key

When the meter is in measurement mode, pressing this key causes the DATA mark to flash and the currently-displayed conductivity and temperature measurement values to be temporarily stored. Pressing the F/ENT key while the DATA mark is flashing stores the data and returns to measurement mode.

To abort data storage, press the DATA key or MEAS key again; the DATA mark turns off and the meter returns to measurement mode.

MEAS : Measurement key

In measurement mode, pressing this key toggles between different LCD display types (refer to Section 3.2, “Measurement Procedures”).

If this key is pressed while in any mode other than measurement mode, the instrument returns to measurement mode. If you want to cancel any operation, pressing this key returns you to measurement mode.

▲▼ : Setting change key

Used to change settings.

F/ENT : Entry key

In measurement mode, pressing this key switches the meter to function mode (see Section 4.3, “Function Modes”). This key is also used to confirm set values.

Buzzer (Beep) sound

When a key is pressed, the buzzer beeps. Where the buzzer beeps once, or when it beeps three times continuously, the meaning is as follows:

(1) When the buzzer beeps once:
This means that key operation was accepted.

(2) When the buzzer beeps three times continuously:
This means that the key operation was not accepted.

To disable the above key entry beep, refer to Sec. 4.3 (11) Set buzzer ON/OFF (bZ.o) panel.

Note: the sound volume level of the beep cannot be adjusted by the user.

4.2 Liquid Crystal Display and Display Items

Displays and their explanations are shown below.

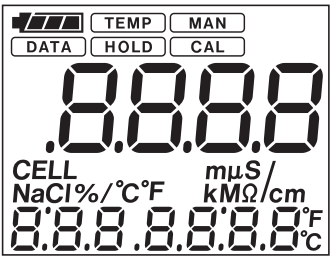

	Remaining battery life display
TEMP	Temp. compensation setting mode
MAN	Manual range setting mode
DATA	Data save mode
HOLD	HOLD mode
CAL	Calibration with std. solution
CELL	Cell constant set mode

F040201.EPS

(1) Remaining battery life display

Remaining battery life is always displayed stepwise. When display is , battery is normal. When a flashing is displayed, battery power is low. Replace the batteries immediately if the above flashing battery symbol appears. Press POWER and confirm that display turns off, then refer to Sec. 2.1 for battery replacement procedure.

(2) Temperature compensation setting mode TEMP

This mark appears when temperature compensation is being set (refer to Temperature compensation setting (t.Co) panel in Section 4.3 (2))

(3) Manual range setting mode MAN

Normally autoranging is used, and optimum range is selected automatically, but if fixed (manual) range setting is used then this mark appears (refer to Range selection (rnG) panel in Section 4.3 (3)).

(4) Data save mode DATA

This mark appears when measured data are stored or when already-stored data are accessed (see Operation of DATA key in Section 4.1, or Display stored measurement value in Section 4.3 (1)).

(5) HOLD mode HOLD

This mark appears while measured data are being temporarily held (refer to Operation of HOLD key in Section 4.1).

(6) Calibration with standard solution CAL

This mode display appears when the calibration with standard solution is conducted (refer to Calibration with standard solution (CAL) panel in Section 4.3 (5)).

(7) Cell constant set mode CELL

This mode display appears when the sensor cell constants are manually set (refer to Cell constant setting (C.C) panel in Section 4.3 (4)).

4.3 Function Modes

Outline

A variety of functions are supported by function mode. Press the F/ENT key to switch from measurement mode to function mode. This mode supports the functions listed in the table below.

Note: The last selected and executed item is displayed when you switch to function mode. Pressing the ▲▼ keys displays the items listed in Table 4.1 in turn.

Methods of setting items

Use the ▲▼ keys to move to the desired item. While the desired item is flashing, press the F/ENT key to set each item in detail.

To return from the function mode to the measurement mode, press the MEAS key.

Table 4.1 Items Set in Function Mode

Item*1		Description	Default*2	For details, refer to:
dAt	dAt	Display stored measurement value	no dAtA	Item (1)
t.Co	t.Co	Temperature compensation setting	0.00 %/ °C	Item (2)
rnG	rnG	Range selection	Auto	Item (3)
C.C	C.C	Cell constant setting	Standard cell constant*3	Item (4)
CAL	CAL	Calibration with standard solution	–	Item (5)
dEL.A	dEL.A	Delete all stored measuring data	–	Item (6)
dAtE	dAtE	Date setting	2004, January, 1	Item (7)
tIME	tIME	Time setting	0 hour 0 minute	Item (8)
ALM	ALM	Alarm time setting	oFF	Item (9)
A.oFF	A.oFF	Set Auto Power Off interval	20 min	Item (10)
bZ.o	bZ.o	Set buzzer ON/OFF	on	Item (11)
SC.U	SC.U	Set measurement unit	S/cm	Item (12)
tP.U	tP.U	Set temperature unit	°C	Item (13)
VEr	VEr	Version number display	–	Item (14)
dFLG	dFLG	Defragment storaged data	–	Item (15)

*1: Numeric display used to simulate alphabetic character display.
*2: –: This data is not user-settable
*3: The standard cell constant for the connected sensor is displayed.

T0401.EPS

Details about how to set each item are provided below.

(1) Display stored measurement value (dAt) panel

Used to display stored measurement values. DATA mark appears in the top left corner of the display. The last-stored conductivity and temperature values are displayed first.

The stored data item number flashes in the lower left corner. Pressing the DATA key displays the date and time of this stored data, and pressing this key again allows individual data to be deleted (refer to the figure next page).

Pressing ▲▼ keys allows you to scroll through all past data. If no data are stored, "no dAtA" is displayed at the bottom of the display.

• Individual deletion of stored data items

After displaying date and time of this stored data, pressing the DATA key displays a panel with dEL. Pressing the F/ENT key on this panel switches to the Data Delete panel.

First no is flashing, so use ▲▼ keys to switch to flashing YES, then press the F/ENT key to delete the stored measurement data that is currently displayed.

• Stored data item numbers after deletions

When you display the dEL panel, the number displayed at the bottom left indicates the stored data number relative to the beginning of the data store. This does not necessarily represent the number of stored data. If you delete a data item, item numbers of data that follow it will be decreased by one (see explanation below).

• Data display after deletion

If a data item is deleted, the data item after it is displayed. If there is no data after it (i.e. it was the last stored data item, the data item before it (if any) is displayed.

When data item 012 (lastest data) is deleted:

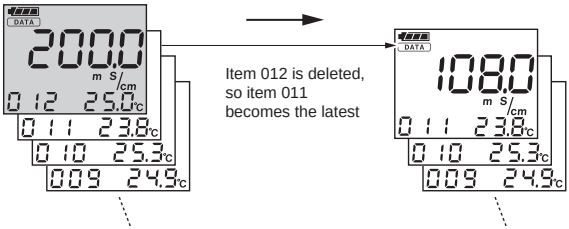

When data item 011 is deleted

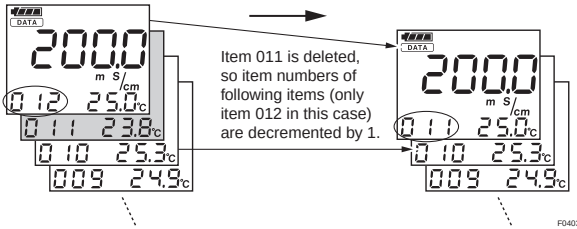

F040300.EPS

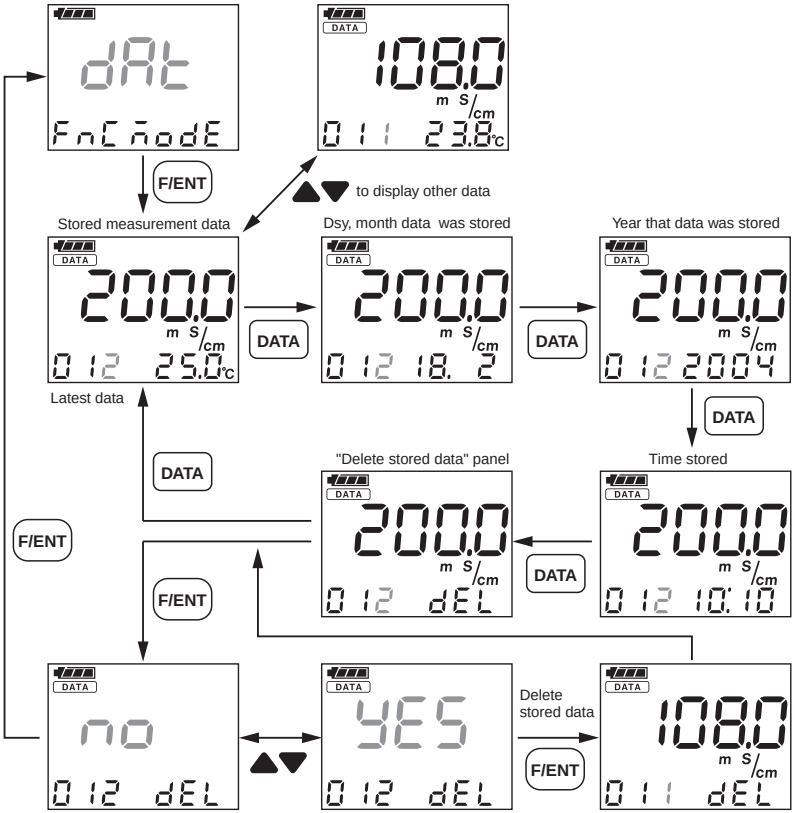

When no stored data.

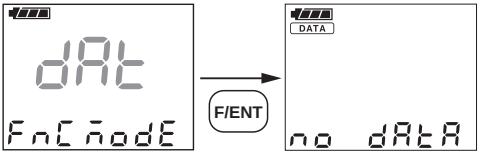

F040301.EPS

(2) Temperature compensation setting (t.Co) panel

This panel is used to change the temperature compensation type and temperature coefficient setting. The TEMP mark appears on the panel.

• Automatic temperature compensation for NaCl solution

Press the ▲▼ keys to select NaCl . Then press the F/ENT key.

• Manual temperature compensation coefficient setting

Press the ▲▼ keys to select %/°C (or %/°F). Then press the F/ENT key. Use the ▲▼ keys to set the temperature coefficient. Then press the F/ENT key.

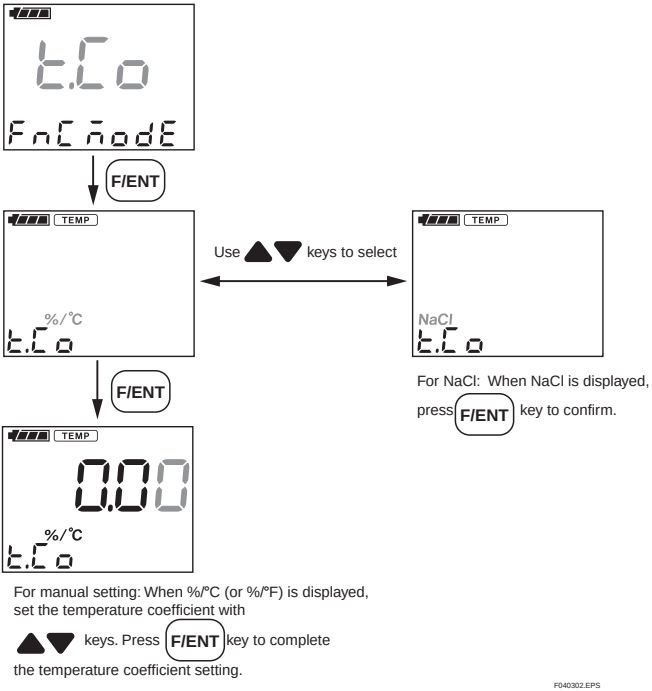

(3) Range selection (rnG) panel

Change the current measuring range. Use the ▲▼ keys to change between autoranging and fixed range. For fixed range, MAN mark appears.

Relationships between automatic and fixed ranges for different sensors

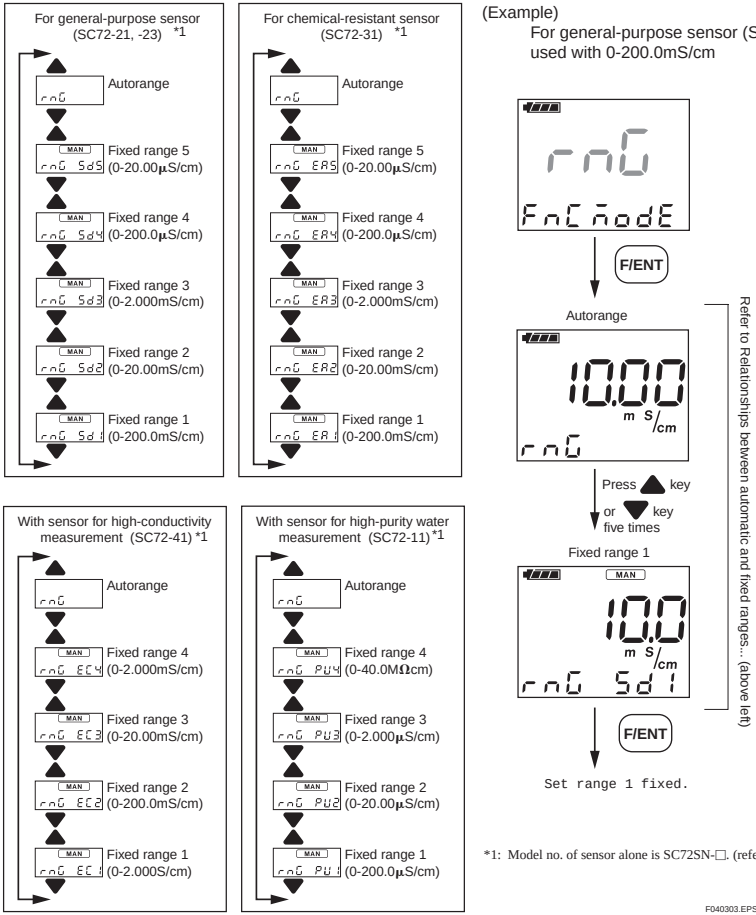

*1: Model no. of sensor alone is SC72SN-□. (refer to Sec. 1.6)

F040303.EPS

(4) Cell constant setting (C.C) panel

This panel with the **CELL** mark is used to set the cell constant manually.

Use the ▲▼ keys to set the cell constant. Then press the F/ENT key.

Typical cell constants are as follows:

For pure water sensor (SC72-11): 0.05 cm^{-1}

For general-purpose (SC72-21, -23) and chemical-resistant sensors (SC72-31): 5 cm^{-1}

Sensors for high-conductivity measurement: 50 cm^{-1}

When setting the cell constant, you should check the nameplate (attached to sensor cable) for the model number and cell constant.

The cell constant can be set in the range ± 20% of standard cell constant. For example, for general-purpose sensors with standard cell constant of 5 cm^{-1}, a cell constant ranging from 4.00 to 6.00 can be set.

Once the cell constant is set, it remains stored in memory even when batteries are removed.

The general-purpose cell has the same cell constant whether used with SC72-21 or SC72-23 type.

Refer to Sec. 2.4 for cell constant setting procedure.

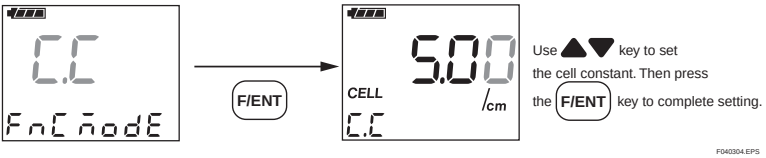

(5) Calibration with standard solution (CAL) panel

This panel is used for calibration with standard solution. Refer to Sec. 5.4 for a description of the calibration procedure. In CAL mode, the CAL mark appears at the top of the panel and all digits of the present measurement value flash.

After the measurement stabilizes, press the F/ENT key to display the measured value at that time. Only the least significant digit flashes. Use the ▲▼ keys to set the desired calibration value, then press the F/ENT key to complete the calibration.

The meter internal cell constant is changed after completing calibration with standard solution. Referring to (4) cell constant setting (C.C) panel, confirm the updated cell constant value and rewrite the cell constant (refer to the value on the plate attached to the sensor cable. Rewritten cell constants remain even if batteries are removed.

To abort calibration using standard solution, press the MEAS key to return to measurement mode.

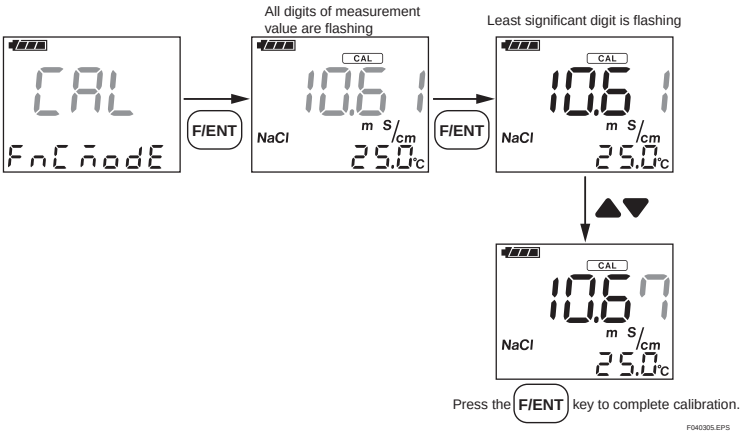

(6) Delete all stored measuring data (dEL.A) panel

This panel is used for deleting all stored data.

When you switch to this panel, no is flashing. Use the ▲▼ keys to select YES.

Press the F/ENT key to delete all the data completely.

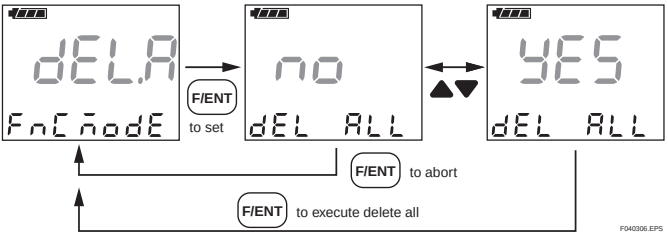

(7) Date setting (dAtE) panel

Set the date for the meter; year (four digits), month, day in order.

Use the ▲▼ keys to set year, month, and day. Then press the F/ENT key to complete setting.

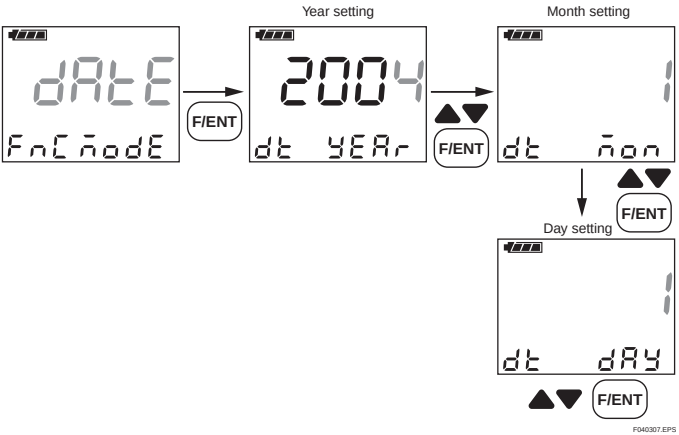

The calendar functions will be correct through to the year 2090.

(8) Time setting (tIME) panel

For the converter, set the time (24-hour display), minutes in order.

Use the ▲▼ keys to set hours and minutes. Then press the F/ENT key to complete setting.

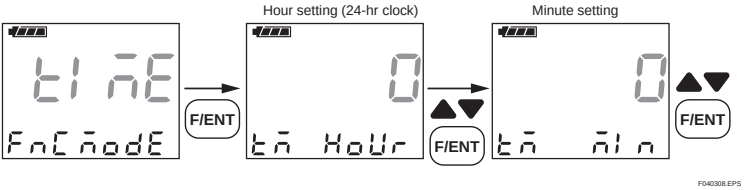

(9) Alarm time setting (ALM) panel

Alarm Enable (ON) / Disable (OFF) and alarm occurrence time (hours and minutes) can be set. Use the ▲▼ keys to set alarm time.

Alarm time setting methods are the same as for (8) Time setting (tIME).

Alarms sounds for about 15 seconds continuously. Acknowledge alarm by pressing any key to stop alarm sound. If no key is pressed to acknowledge the alarm occurrence, alarms sound for 15 seconds again three and six minutes after the preset alarm time.

Note: The day of the week is not displayed

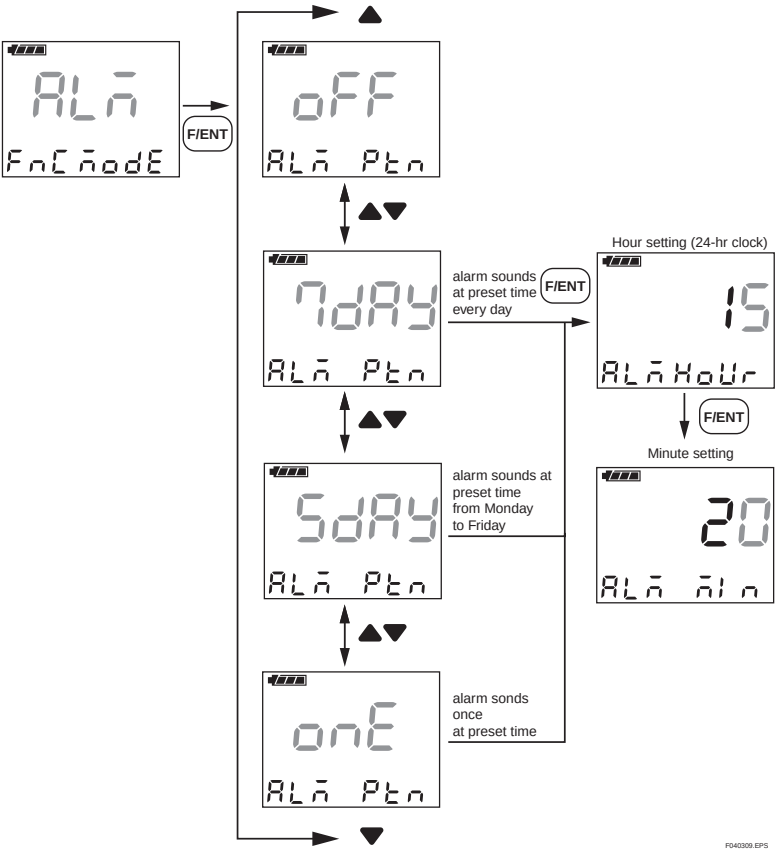

(10) Set Auto Power Off interval (A.oFF) panel

Set the time interval for the power to turn off automatically if no key is pressed during a preset time interval. The Interval can be set to between 1 and 120 minutes. If “0 minutes” is set, automatic power OFF functions are disabled, so — without some care — batteries won’t last very long.

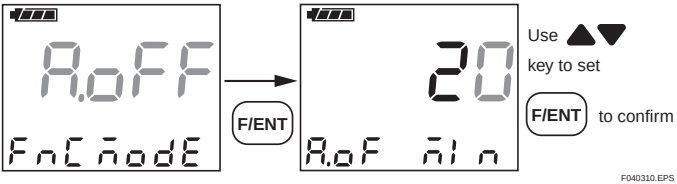

(11) Set buzzer ON/OFF (bZ.o) panel

This panel is used to enable or disable the beep (“buzzer”) that sounds when keys are pressed.

Use the ▲▼ keys to enable / disable. Then press the F/ENT key to complete setting.

Note this function does not disable the Time Alarm sound in (9) above.

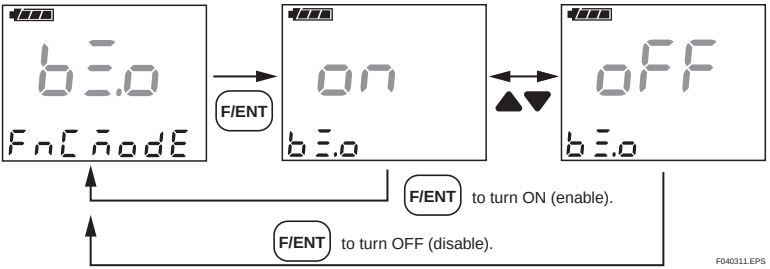

(12) Set measurement unit (SC.U) panel

Toggle the measurement value units between [S/cm] and [S/m].

Use the ▲▼ keys to toggle the measurement value units. Then press the F/ENT key to complete setting.

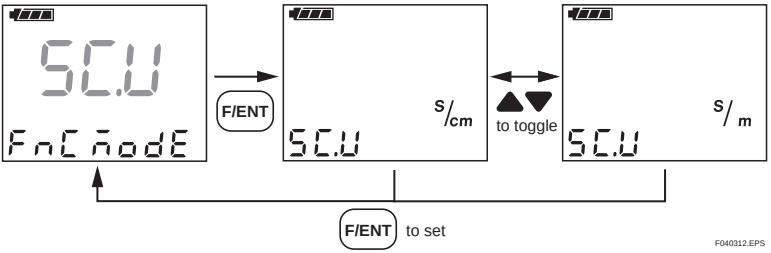

(13) Set temperature unit (tP.U) panel

Toggle the temperature units between [°C] and [°F].

Use the ▲▼ keys to toggle the temperature units. Then press the F/ENT key to complete setting.

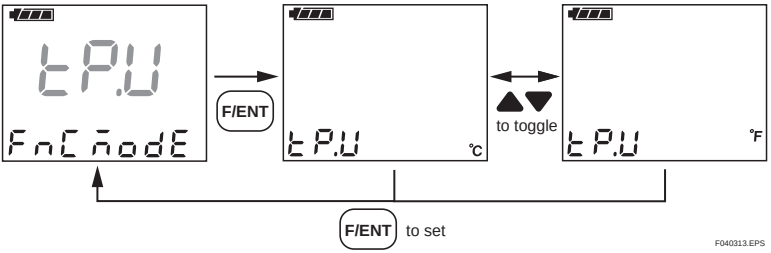

(14) Version number dispaly (VEr) panel

Displays program firmware version number. Can't be set by the user.

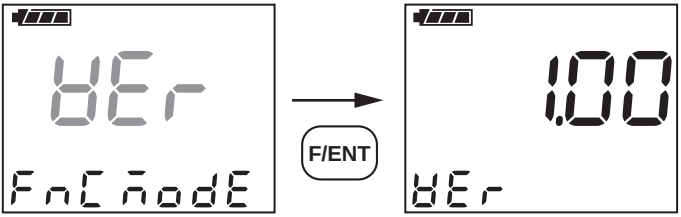

F040314.EPS

(15) Defragment storaged data (dFLG) panel

Up to 300 data can be stored. Unnecessary data can be individually deleted as in (1) Stored measurement data panel (dAt). At the same time, individual deletion does not free up memory occupied by deleted data, so FULL may be displayed even though less than 300 data are stored. In such a case, use defrag functions to compact storage and free up the space occupied by deleted data, thereby allowing up to 300 data to be stored.

While data defrag is in progress, do NOT turn off the power. In addition, before starting data defrag, check that the battery power is normal to avoid battery voltage dropout during defrag.

• Performing data defrag

If the F/ENT key is pressed from the display shown below, no flashes.

Use the ▲▼ keys to select YES, then press the F/ENT key. While defrag is in progress, [WAIt] flashes (Note: if only a few data are deleted, you may not even see it). When defrag is complete, [End] is displayed.

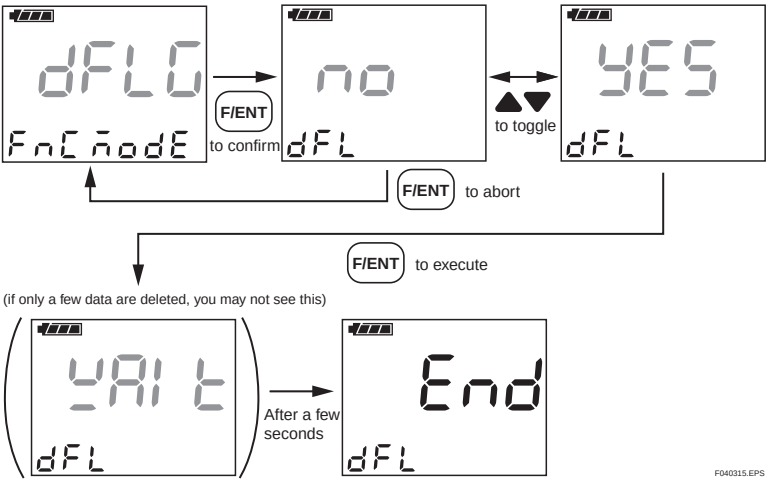

5. Handling of the SC72 Personal Conductivity Meter

5.1 Tips to Maintain Meter Performance

The SC72 meter appears to be very simple, but is a precision instrument. To ensure that measurement accuracy is maintained, observe the following precautions regarding preliminary setting, measurement, maintenance and storage.

Preliminary setting, measurement, maintenance and storage:

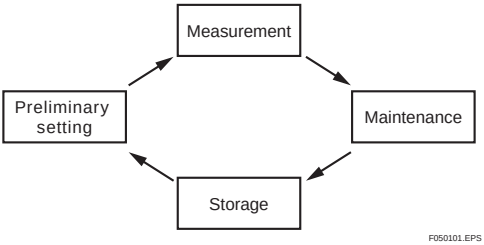

Table 5.1 Observe the following precautions

Preliminary setting	**Setting cell constant** • Set specific electrode cell constant. **Setting temperature coefficient** • Set liquid temperature coefficient when the standard temperature conversion is required (see Section 2.5) If standard temperature conversion is not requiresd, set 0.00.
Measurement	• Select one of the three conductivity measurement ranges (0 to 200μS/cm, 0 to 200mS/cm, or 0 to 2S/cm) corresponding to the type of electrode used. Temperature measuring range is 0 to 80°C.
Maintenenace	• When measurement is completed, thoughly wash electrode to remove the measured liquid. • If the electrode gets stained or deformed, its cell constant may change. In this case, calibrate the meter with standard solution (see Section 5.4).
Storage	• Avoid high-temperature, high-humidity storage locations.

T0501.EPS

5.2 Washing the Electrode

Dirt or stains on the electrode may have an adverse effect on the cell constant, thereby making accurate conductivity measurement impossible. Therefore, after measurement, rinse the electrode in clean water (for example, tap water) to remove stains. Even if staining is not apparent, the sensor performance may have changed. If so, wash the electrode by moving the sensor up and down in hydrochloric acid (about 0.1 mol/l) or water with a little neutral detergent dissolved in it. [For general-purpose and pure-water sensors: if the electrodes are difficult to clean, wipe them gently from top to bottom with a cotton wool swab.] After cleaning the electrode, rinse it in water.

• General-purpose sensor

(The figure below shows the general-purpose sensor with the cover removed).

Remove the cover, and wipe stains off the electrodes (inner electrode and tip element) with a cotton swab. Rinse in a cleaning solution consisting of water containing a little neutral detergent, to remove stains from the electrode. After cleaning, wipe the electrode element (inner and edge electrodes) with tissue paper or cotton wool.

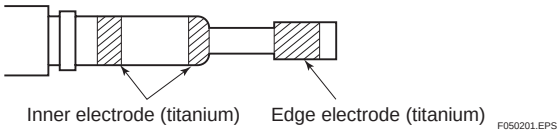

• Sensor for high-purity water measurement

Remove the reference electrode part, and wipe the electrode elements (the shaded parts in the figure) with tissue paper or cotton wool.

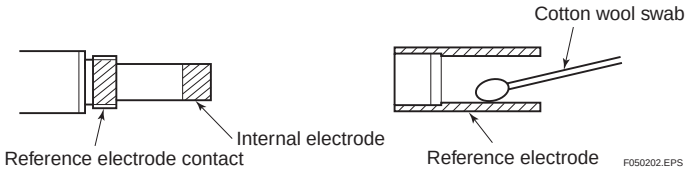

* Corrosion-resistant sensors and sensors for high-conductivity measurements

Use a beaker or the like containing water, dilute hydrochloric acid, or weak neutral detergent; move the sensor up and down so it is immersed up to the air vent, and wash in tap water to clean out the air vent.

5.3 Cleaning and Drying Connector

If there is an electrical path between the connector pins, solution conductivity cannot be measured correctly. Clean the connector (shown in the figure) with a dry cloth, or a cloth moistened with pure undiluted alcohol, to remove moisture and/or stains. If necessary, use a hair dryer to dry any section that is likely to be difficult to wipe.

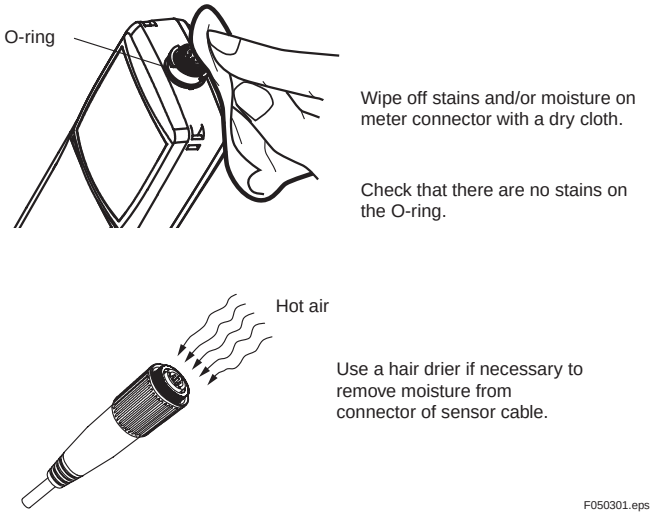

CAUTION

For free from moisture, use pure undiluted alcohol to clean the connectors. Dry connectors completely.

5.4 Calibration with Standard Solution

Note: Calibration with standard solution means to measure a standard solution of accurately-known conductivity and to adjust SC72 meter so that the displayed measured value is the same as the known conductivity value of the standard solution.

If the sensor has been used for a long time, and does not look clean despite washing, recalibrate the SC72 meter with standard solution to check if cell constant is normal.

If "Err 3" occurs during calibration with standard solution, replace the sensor.

Note that if calibration with the standard solution shows that the cell constant has changed, update the cell constant value on the sensor cable with the new data.

Notes for calibration with standard solution:

Types of standard solution

Use NaCl (sodium chloride) or KCl (potassium chloride) solutions.

(1) NaCl (sodium chloride) solution

When NaCl solution is used, the temperature coefficient of NaCl is built into the temperature compensation functions of the meter so conductivity converted to 25 °C can be readily obtained regardless of liquid temperature. Standard NaCl solution of 0.1 mol/l (normal unit expressing concentration of solution) is available as an option from Yokogawa. For more details, see Section 1.7.

When the sensor for high purity water measurement is used, dilute the standard solution with pure water to obtain 0.001 ml/l solution of conductivity 1 µS/cm. Conductivity is as follows:

0.1 mol - NaCl solution: conductivity 10.67 mS/cm at 25°C

0.001 mol/l - NaCl: conductivity 123.9 µS/cm at 25°C

(2) KCl solution

Table 5.2 describes how to make KCl solution of different concentrations, and lists their conductivities.

Table 5.2 How to make KCl solutions, and their conductivities (based on JIS K 0102)

KCl solution	How to make	KCl standard solution, µS/cm		
		0°C	18°C	25°C
A	Dissolve 74.2460g of KCl in water to get 1l at 20±1°C.	65176	97838	111342
B	Dissolve 7.4365g of KCl in water to get 1l at 20±1°C.	7138	11167	12856
C	Dissolve 0.7440g of KCl in water to get 1l at 20±1°C.	773.8	1220.5	1408.8
D	Dissolve 100ml of standard solution C avobe in water to get 1l at 20±1°C.			146.93

T0502.EPS

* Before calibrating the meter with standard solution, check that the electrode is clean. If stains are found, clean the electrode first. Also check that the cover (of general-purpose sensor) and outer electrode (of sensor for high purity water measurement) are secure. Cell constant is affected by stains or loose cover.

When calibrating, ensure that measuring range is set so that you can enter conductivity to as many digits as possible. For example, in the table above, the conductivity of standard solution C at 25°C is 1408.8. If the meter is set to autorange, or to a manual range of 0 to 2.000 mS/cm, you could set this as 1.409 (four digits). However if the range were set to 0 to 200.0 mS/cm, you could only enter conductivity value as 1.4 (only two digits accuracy, which is inadequate for calibration with standard solution.

Before calibrating the meter with standard solution

Check and set the following items before calibrating the meter with standard solution.

(1) Check sensor for stains

Check that there are no stains on the sensor. Also check that the meter cover (for general-purpose sensor) or outer electrode (for sensor for high purity water sensor) are not loose.

(2) Setting temperature coefficients

When the meter is calibrated with a NaCl solution, set a temperature coefficient (indicated by “NaCl”) for NaCl solution. When it is calibrated with a KCl standard solution, set a temperature coefficient of 0.00 (%/°C).

(3) Standard solution temperature

For a NaCl standard solution, check that the standard solution temperature is in the range 25°C ± 10°C.

For a KCl standard solution, stabilize its temperature at 25°C ± 1°C or 18°C ± 1°C.

If it is difficult to maintain the above temperatures, set the temperature coefficient of KCl standard solution in the meter. To find the temperature coefficient, refer to table 5.2 above and to Section 7.3, “Temperature Compensation and Finding Temperature Compensation Coefficient.”

Procedures for calibration with standard solution

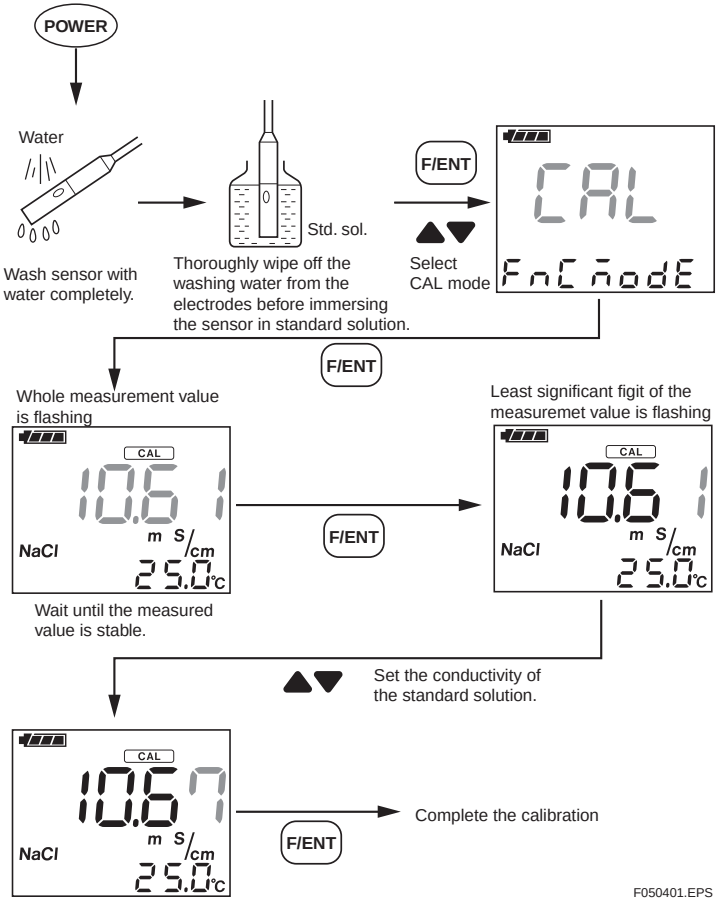

Refer to Section 4.3, “Function Modes,” for temperature coefficient and cell constant settings.

5.5 Storage and Maintenance

- **Method of storage**

  Care is required when storing the SC72 meter. To maintain the SC72 meter in good condition, observe the following:

  (1) After measurement, thoroughly wash the sensor in water.

  (2) Leave the sensor connected to the meter body, to protect the connector from staining. Connector contamination could affect connector leakage resistance and thus conductivity reading accuracy, or affect the waterproofing afforded by the O-ring.

  (3) Do not place any object on top of the sensor or on the top of SC72 meter.

- **Storage location**

  When the SC72 meter is not being used, store it in a safe place. If it is to be stored for a long time, store it:

  * In a dry place (low humidity) at normal temperatures.
  * Out of direct sunshine.
  * Do not store it in a corrosive gas atmosphere.
  * In a location free from water condensation.

- **Replacing O-rings or gaskets**

  Gaskets for the battery box and O-rings for sensor connections can be replaced. If they are very dirty or damaged, replace them with new ones.

CAUTION

When installing O-rings and gaskets, clean them and their mounting surface with a cloth moistened with alcohol so that they are free from dirt. Otherwise, water resistance may not be assured.

5. Handling of the SC72 Personal Conductivity Meter

(1) Replacing O-rings

Install the O-ring on the cylindrical flat part as shown in the figure.

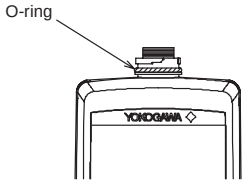

F050501.EPS

(2) Replacing gaskets

Install the gasket with its raised part facing downwards on the groove of th meter case.
Gaskets are symmetrical (on the right and left, and on the front and rear).

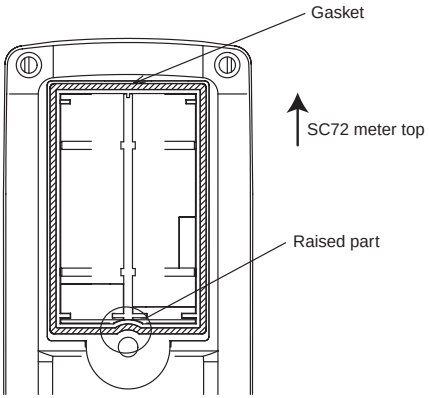

F050502.EPS

6. Troubleshooting

6.1 Causes of Abnormal Conductivity Display

The measured temperature is stable, but the conductivity reading is unstable, or an unrealistic value is displayed, check the following:

(1) Is maintenance required, and has handling of the meter been adequate?

(2) Does the battery need replacement?

(3) Is SC72 meter unserviceable?

If any problem is evident, follow the procedure shown in Section 6.2 to determine the cause and fix the problem. If you cannot fix it, contact your nearest Yokogawa sales office.

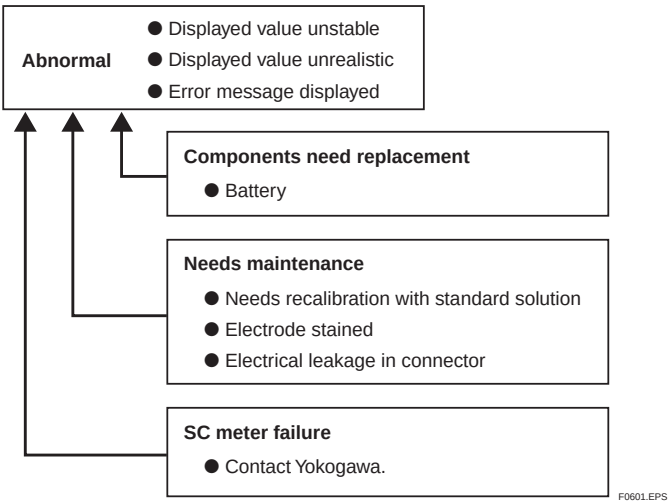

Figure 6.1 Causes of abnormality

6.2 Error Messages and Corrective Action

Table 6.1 Error Message

Error message *1		Name
Err1	Err 1	Temperature compensation computation value out of range
Err2	Err2	Out of temperature measurement range
Err3	Err3	Calibration error
Err6	Err6	Meter electronics failure
or	or	Out of measuring range

*1 Alphabet values simulated on a numeric display

T0601.EPS

(1) Err1 Temperature compensation computation value out of range

Cause:

When the standard temperature conversion is made to conductivity at 25°C, this instrument performs temperature compensation computation based on the preset temperature coefficient.

Err1 is displayed in cases where temperature compensation computation is impossible because the preset temperature coefficient is improper or a solution with a large temperature coefficient is measured at temperatures lower or higher than 25°C.

Corrective action:

* Reset the temperature coefficient to the correct value.
* Measure solution at about 25°C.

(2) Err2 Out of temperature measurement range

Cause:

This error occurs if the measurement liquid temperature is outside the range -10 to 120°C, or if sensor cables are disconnected.

Note: The liquid temperature should never be outside the range 0 to 80°C.

Corrective action:

* Set the liquid temperature to 0 to 80°C.
* Replace the sensor. (Refer to Sec. 1.6)

(3) Err3 Calibration error

Cause:

When the calibration with standard solution is made, each time cell constants are changed. Err3 occurs if the conductivity of the standard solution is wrong, or changed cell constants are beyond ± 20% of the standard cell constant, due to a damaged sensor.

Corrective action:

* Use correct standard solution conductivity. (Refer to Sec. 5.4)
* Replace the sensor. (Refer to Sec. 1.6)

(4) Err6 Meter electronics failure

Cause:

Err6 occurs if the meter electronics fails.

Corrective action:

* Contact your nearest Yokogawa sales office.

(5) or Out of measurement range

Cause:

Conductivity is over the maximum value on the range.

Corrective action:

For manual ranging, select an appropriate range. If value exceeds maximum of highest range (or when on autorange), use a more appropriate sensor (see Sec. 4.3 (3)).

6.3 Causes of Abnormal Measured Value

If error messages do not occur, but measured values seem incorrect, check the following:

* Are cell constants and temperature coefficients correctly set?
* Is the sensor properly connected to the meter?
* Are bubbles attached to the electrode portion?
* Is the sensor damaged or dirty?

6.4 Other conditions

- **An alarm sounds**
  The alarm clock is set (see Sec. 4.3 (9) and change setting as required).
- **To Enable / Disable Key-Press Audible Feedback (buzzer)**
  Refer to Sec. 4.3 (11) to change setting as required.

7. Measuring Principles of this Instrument

7.1 What Is Conductivity?

Conductivity of a solution is defined as the ability of the solution to conduct electric current. It is the reciprocal of the resistance between two sensors (both of areas 1 m^2) at a distance of 1 m apart in the solution.

1 S/cm = 100 S/m

Figure 7.1 shows the conductivities of typical solutions.

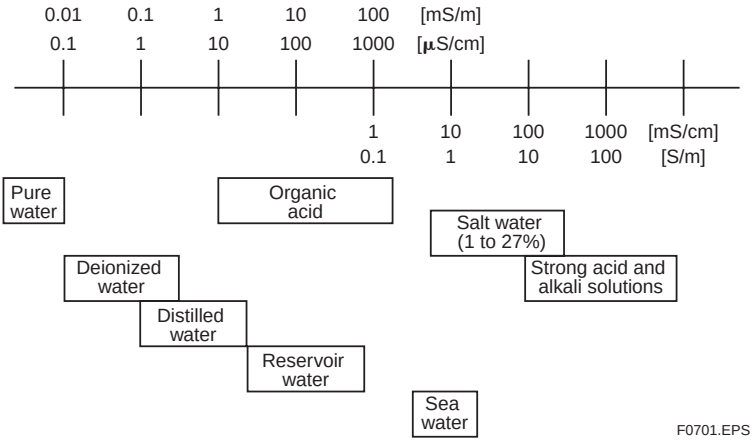

Figure 7.1 Conductivity of Typical Solutions

7.2 Principles of Operation

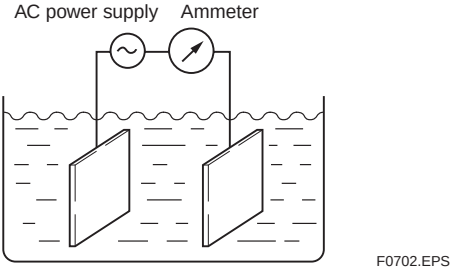

Figure 7.2 Operational Schematic

Dip two metallic plates (used as sensor electrodes) in a solution and apply a certain voltage to flow current (I):

$$I = \frac{E}{Rc} \quad \text{.....} \quad (1)$$

where Rc = solution resistance between two sensors

The relationship between Rc and conductivity K is expressed by:

$$Rc = J \cdot \frac{1}{K} \quad \text{.....} \quad (2)$$

where J = constant (also called cell constant) — determined by sensor and distance between two sensors

From equations (1) and (2) above, we obtain:

$$K = \frac{J}{E} \cdot I \quad \text{.....} \quad (3)$$

E and J are constant, so the conductivity (K) can be obtained by measuring the current (I).

7.3 Temperature Compensation and Finding Temperature Compensation Coefficient

• Temperature Compensation

Table 7.1 shows the conductivity ratio at each liquid temperature when the conductivity of a NaCl solution at 25°C is 1.

Table 7.1 Conductivity Ratios at Different Temperatures in NaCl solutions

0°C	25°C	50°C	75°C	100°C
0.542	1	1.531	2.103	2.677

T0701.EPS

As shown in the above table, liquid conductivity changes with liquid temperature. So, in order to compare conductivities, conductivity values at a fixed liquid temperature are needed. This SC72 meter includes standard temperature conversion functions, to display a liquid conductivity value converted to 25°C, so this meter can be used for such conductivity measurement comparisons. Temperature compensation coefficients of an NaCl solution are stored in the SC72 meter. No other temperature coefficient setting is required (for NaCl solutions).

Table 7.2 shows temperature coefficients of various electrolytic solutions.

Table 7.2 Temperature Coefficients of Electrolytic Solutions

Solutions	Temperature coefficient (%/°C)		
	1mol/l	1/10mol/l	1/1000mol/l
Lithium benzoate solution	---	2.28	2.28
Sodium acetate solution	2.20	2.20	2.20
Potassium chloride solution	1.74	---	1.98
Sodium hydroxide solution	1.74	---	1.87
Sulfuric acid	1.07	---	1.38

T0702.EPS

• Finding Temperature Coefficient

If temperature coefficient tables containing the liquid to be measured can not be found, measure conductivity twice at two liquid temperatures between 10 and 30°C with temperature coefficient set to 0.00 and use the equation shown below to find approximate temperature coefficient (**α**).

$$\text{Temp. coef. } \alpha = \frac{K_2 - K_1}{K_1(t_2 - 25) - K_2(t_1 - 25)} \times 100 \ (\%/°C)$$

where t_1, t_2: liquid temperature (°C)
K_1 : conductivity at t_1
K_2 : conductivity at t_2

(Calculation example)

To find the temperature coefficient of liquid with conductivity - 124.5 (S/cm at liquid temperature 18.0°C and 147.6 (S/cm at liquid temperature 31.0°C, substitute t_1 = 18.0, t_2 = 31.0, K1 = 124.5, K2 = 147.6 in the equation above, thus we can obtain:

$$\alpha = \frac{147.6 - 124.5}{124.5 \times (31.0 - 25) - 147.6 \times (18.0 - 25)} \times 100$$

$$= \frac{23.1}{747.0 - (-1033.2)} \times 100$$

$$= 1.298$$

Set the temperature coefficient 1.30 in the SC72 meter (as meter allows three digits to be entered).

- **Checking if meter is working correctly**
  When the temperature coefficient already set is accurate, the conductivity displayed should be constant regardless of liquid temperature (within permitted temperature range). Check that the temperature coefficient already set is accurate. When the liquid temperature is lowered, if a larger conductivity is indicated, the temperature coefficient already set is too small; whereas, if a smaller conductivity is indicated, the temperature coefficient already set is too large. In such a case, change the temperature coefficient such that the measured conductivity does not change with temperature.

7.4 Wetted Part Materials of Sensors

- **For general-purpose sensor**
  Titanium (sensor)

  Polyphenylene sulfite resin, Polypropylene resin (insulated area and cover)

  Fluoro rubber (O-ring)

- **Sensor for high purity water measurement**
  SUS 316 stainless steel (electrode element)

  Polypropylene resin (insulated area)

  Fluoro rubber (O-ring)

- **Chemical-resistant sensor**
  Glass, platinum black (electrode element)

Sensor for high-conductivity measurement
Glass, platinum black (electrode element)

Appendix

Key-Operation Flow Chart (for reference)

Typical screens are shown. Refer to the corresponding section in the body of the manual for details.

● When turn on power

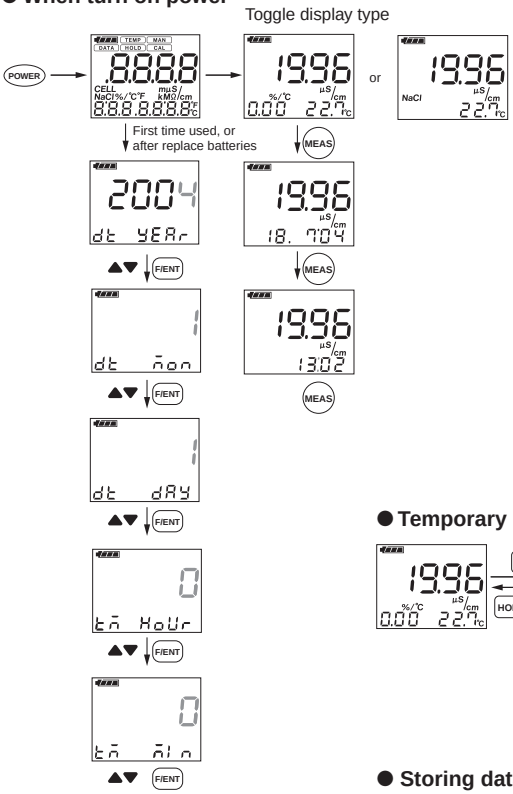

● Temporary hold

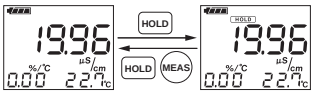

● Storing data

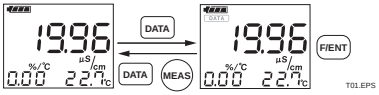

Appendix

● Function Mode

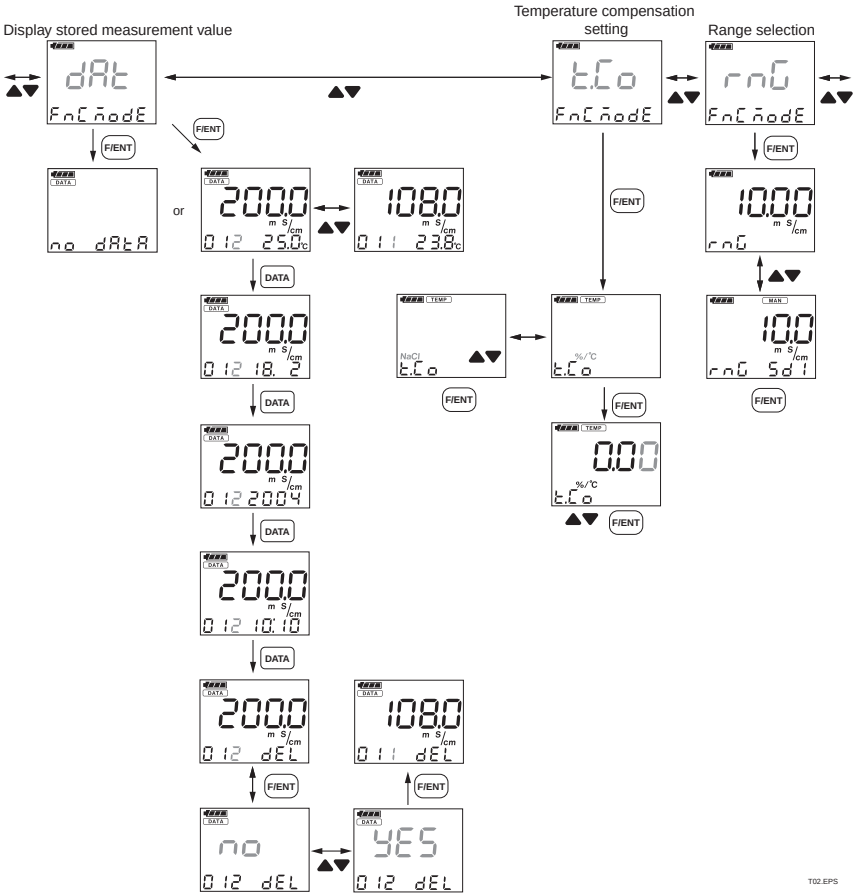

● Function Mode

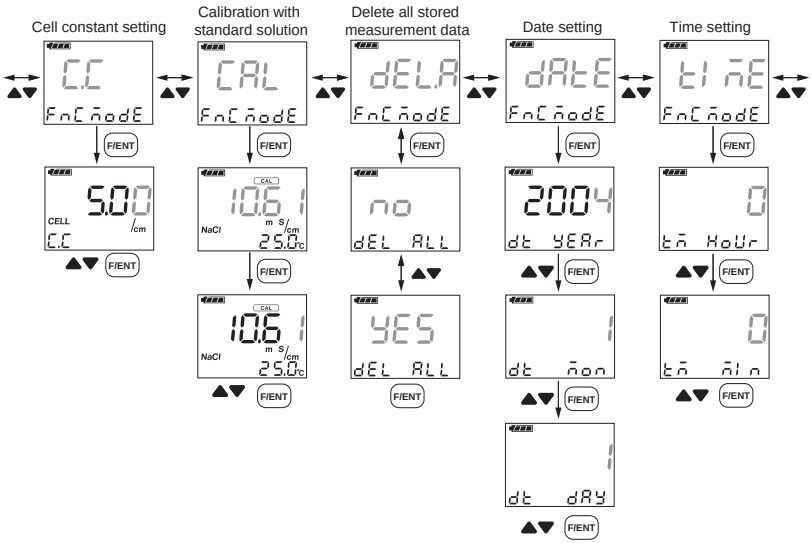

● Switching to Function Mode

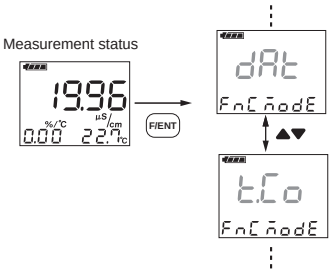

● Reverting to Measurement Mode

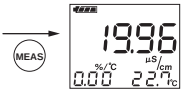

T03.EPS

● Function Mode

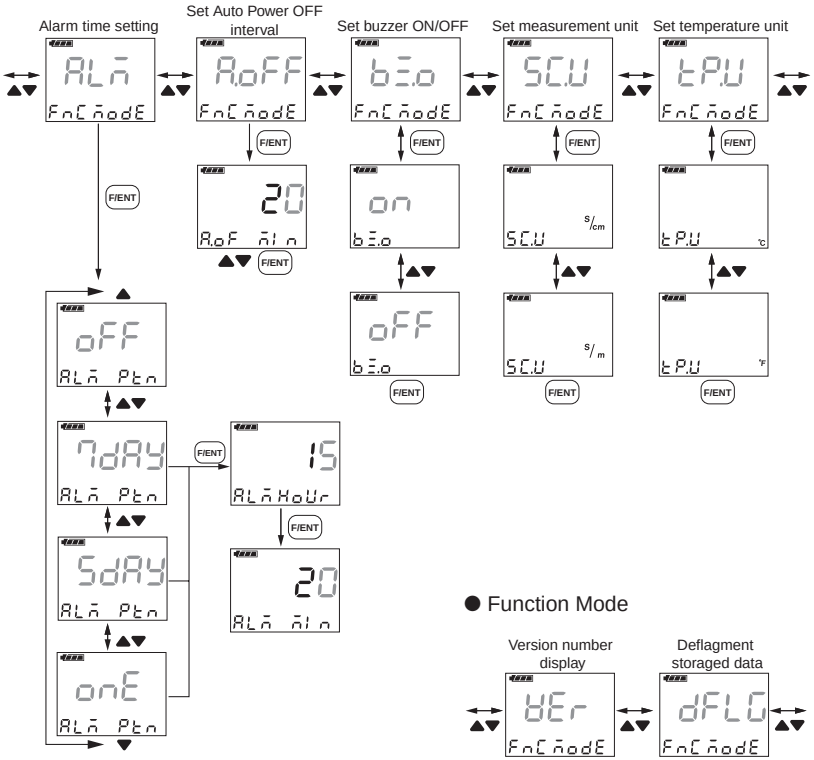

● Function Mode

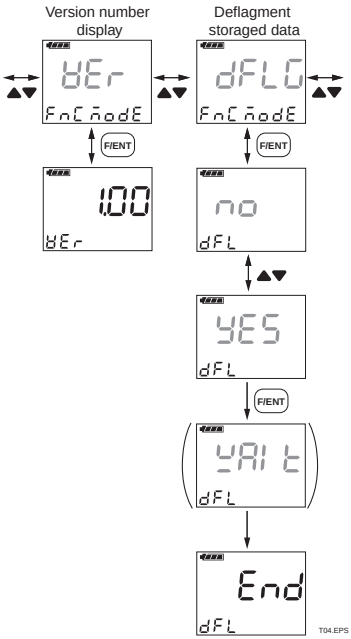

Revision Record

Manual Title : Model SC72 Personal Conductivity Meter
Manual Number : IM 12D03D02-01E

Edition	Date	Remark (s)
1st	Aug. 2004	Newly published
2nd	Apr. 2008	Addition of information on EMC compliance: P.1-3 Addition of CAUTION: P2-2 Correction: P.1, 1-2, 1-6, 2-1, 2-3, 3-1, 3-3, 4-1. 4-5, App-1, App-4
3rd	Aug. 2009	Change of information on EMC compliance: P.1-3