Miele
PROFESSIONAL

G 7893 Compact Washer
With Integrated Forced-Air Drying

Exceptional Drying
In a Space-Efficient Design

Miele G 7893 Overview

Always an innovator in glassware reprocessing, Miele is the first manufacturer to develop a 24" wide glassware washer that incorporates true HEPA-filtered forced-air drying. The new G 7893 allows labs to automatically wash and completely dry glassware right at the lab bench, while requiring minimal space. This eliminates the need for a bench-top oven for drying, and means that your glassware can be washed and dried all within about an hour.

The G 7893 is designed for laboratories where space is limited, yet complete, particulate-free drying of glassware and fast turnaround are required. No drying oven is needed, as the G 7893 contains a powerful integrated drying unit with a genuine HEPA filter that guarantees the purity of the air used. For you this means less handling of glassware and less time waiting for your glassware to be available for use.

HEPA-Filtered Forced-Air Drying

Miele's HEPA drying system provides a faster more complete drying result than gravity convection drying found in many glassware washers. Drying times and temperatures (from ambient to 99°C) are fully adjustable to meet the demands of whatever is being dried. An integrated steam condenser aids the drying process by condensing moist air and sending it to the drain. As a result, no potentially hazardous vapors are vented into your lab.

When combined with injection baskets, heated forced-air blows throughout the chamber and through injectors into each individual piece of glassware for complete drying even in difficult narrow-necked items such as volumetric flasks or pipettes.

For user safety, a cool-down step can be programmed at the end of the cycle to ensure that glassware is safe to handle. With the compact G 7893, the HEPA filter is conveniently located in the front of the machine and can be replaced by opening the service hatch for simple removal of the filter.

Optimized Turnaround

The G 7893 provides effective glassware cleaning and drying as well as exceptional capacity and throughput within a compact footprint.

With appropriate baskets, a lab technician can load up to 66 narrow-necked flasks, 96 pipettes, or over 1200 test tubes in a single load which results in an exceptional optimized turnaround of glassware.

Leading Machine Features
Superior Cleaning

G 7893 Key Features
HEPA-filtered forced-air drying
Fast, particulate free drying
Multitronic controller
Simple to operate
8 standard and 1 custom wash program
Adjustable wash/rinse temps up to 93º C
Audio-visual alarms
Automatic dispensing
Door-cup powder detergent
5 liter liquid neutralizer
Heated DI water rinsing
Multiple pure water rinses possible
Accepts pure water up to 18 megohm
Powerful 106 gpm circulation pump
Speed sensor to protect pump in event of blockage
Soft start
Separate pump for drainage
Waterproof system
Automatic shut-off of incoming water
Dual NTC temperature sensors
For precise temperature control
Steam Condenser
Assists in fast drying
Validation ready
Test port
IQ/OQ documents available
Built to last
304/316 polished stainless steel chamber
304 stainless steel brushed finished exterior cabinet
Wide array of interchangeable baskets
Injection cleaning and drying of narrow-necked items
Built-in water softener
Automatically softens tap water for better cleaning results
Adjustable for your water hardness
Four-stage filter system
Captures debris and protects pumps
Flow meters measure incoming water
For superior accuracy and efficiency

Superior Cleaning Results

Miele washers employ a delicate balance of four factors to ensure exemplary cleaning results. Through a careful balance of wash time, water temperature, water circulation and spray pattern, and specific cleaning agents, Miele systems provide effective and repeatable wash results. Independent test results demonstrate that Miele washers are effective for removal of a wide range of substances including metals, and do this without leaving trace levels of the substances or detergent. Test result copies are available from Miele.

Flow Meters & DI Rinse Cycles

Complete elimination of residue is best achieved by one or more heated DI water rinse cycles. The G 7893 features a DI water connection with the ability to heat the water up to 93°C. Typically 1-3 DI water rinses are sufficient, but the washer can be programmed to utilize pure water for any or all steps if desired. Miele combines this with flow meters for all incoming water types, which allows extremely precise filling and varying of fill volume by program step. In this way, wash programs are factory optimized for water conservation and can be further adjusted in the programming mode.

Standard Built-In Water Softener

Soft water provides improved cleaning results and is gentler on your washer. For this reason, the G 7893 is equipped with a built-in softener system for tap water. This eliminates scaling and enables your detergent to work at peak efficiency. The Miele system can be adjusted to compensate for the hardness of your local water supply. If incoming water is already soft, the system can simply be deactivated. Once the system is set to your water hardness, no programming is required. Simply add salt when the “recharge softener” light comes on and the washer does the rest.

Advanced Filter System

The G 7893 features a 4 stage sump filter system to prevent debris from re-circulating and distributing onto the wash load. Filters are upstream of the circulation and drain pumps to protect and extend pump life. The four filters include a surface filter, course filter, a fine filter and a micro-fine filter with a mesh size of just 0.25 mm. Filters can be easily removed for cleaning without the use of tools.

Additionally, the water inlet hoses supplied by Miele include mesh filters to capture any particulate material within your tap water prior to entering the machine.

Leading Machine Features
Superior Construction and Design

Standard Steam Condenser

The G 7893 is equipped with a steam condenser, which eliminates the need for external machine venting and keeps potentially hazardous vapors from venting into the lab during operation.

This system condenses water vapors and sends them down the drain. The steam condenser assists in providing fast drying results, ensures minimal heat output into your lab, and simplifies the installation of the washer.

High Water Temperatures

In general, hotter water provides more thorough cleaning and rinsing in a shorter time period. The G 7893 can heat wash and rinse water up to 93°C. Water temperatures can be adjusted for each heated water fill providing maximum wash flexibility. Miele's 6000 watts heat up the wash water at nearly 4 times the rate of some other brands, ensuring that wash cycles will be completed in a reasonable amount of time regardless of temperature selected.

Water temperatures are closely monitored by dual NTC sensors to ensure valid and repeatable wash results. If water temperatures are out of range an alarm condition will occur, since temperature is one of the critical factors in ensuring analytically clean glassware.

Stainless Steel Chamber

Miele stainless steel wash chambers are built to withstand the rigors of a demanding laboratory workplace. Because heated DI water, chemical residues, and cleaning agents can attack the wash cabinet itself, special care must be taken to construct a chamber that is exceptionally corrosion-resistant.

With Miele, the chamber walls and ceiling are constructed of 304 stainless steel, while the floor and door (which take more of a beating) are constructed of high-grade 316 stainless steel for added corrosion-resistance. Surfaces are polished and seams are laser welded from outside of the wash chamber minimizing spots where corrosion can occur.

With Miele, the wash chamber and entire circulation path is built to handle 18 megohm heated DI water, without risk of damage or corrosion to the washer. Miele machines are known to perform year after year without any sign of corrosion.

Water Delivery System

The G 7893 features a high-volume circulation pump that is rated at 106 gallons per minute. This high turnover rate of water is combined with a low spray pressure to provide effective cleaning action while remaining exceptionally gentle to prevent delicate glassware from being broken.

The Miele circulation pump ramps up to speed slowly ensuring delicate items will not be broken by a sudden blast of water. The pump also includes a speed sensor. In the event of improper pump speed or a complete blockage, the machine automatically shuts down the pump and alerts the operator. These features ensure valid wash results and extend the pump life.

In addition, G 7893 also features an independent pump for drainage. A separate drain pump ensures that with each wash step residue is sent to the drain and not redistributed onto the wash load, reducing the possibility of cross-contamination.

Leading Machine Features For Safety and Ergonomics

Waterproof System to Protect Your Lab

The Miele G 7893 is designed for years of trouble-free performance, but in the unlikely event of a leakage, the machine is equipped with a unique Waterproof System.

Should your G 7893 ever develop a leak, a safety device on the incoming water line will automatically shut off the water supply, activate the drain pump and alert the user.

Miele achieves this with double-wall water inlet hoses and a solenoid device that is attached to the water inlet valve. Any leaks that occur to the hoses or the washer will send water to a drip pan located in the base of the machine, which is equipped with a float switch that becomes activated by incoming water.

The float switch will automatically send a signal to the water supply to shut down the water, and activate the drain pump. A fault signal will also alert the operator to the problem. The Miele waterproof system is one of many unique features that set it apart from other brands.

The Strong and Silent Type

While the G 7893 will clean even your toughest lab residues from your glassware, it remains exceptionally quiet in the process. Washing at just 52.9 dBA, you will hardly notice when the G 7893 is running, allowing you to converse in the lab without distraction. In fact, your casual conversation (at about 65 dBA) will be substantially louder than the G 7893 cleaning your glassware.

Safety Devices
The G 7893 is designed to provide optimal results with exceptional safety features, including:
Automatic door lock
Protects personnel from possible scalding hot water from opening door during wash routine
No door vent
No potentially hazardous vapors are vented into your lab
Audio-visual alarms
To alert operator of any error conditions
Dual temperature sensors
Protects against overheating
Waterproof system
Protects your lab from flooding
Built-in backflow prevention
Assures no contaminated water backs up into washer or pure water system
Pump speed sensor
To protect against overheating
Drying cool-down step
Ensures glassware is safe-to-handle
Gentle cleaning action
Assures that glassware will not break
Color-coded dispensing system
Helps ensure detergents and acids are not accidentally mixed up

Multitronic Controller
Simplicity and Ease of Use

Simple Control

The Miele Multitronic control system is powerful yet easy to use, providing quick access to all program functions and indicators. To run the machine, the operator simply turns the machine on, selects the desired wash program and presses the start button.

Through the expertise of the Miele Application Laboratory, the G 7893 is equipped with a selection of eight standard cleaning programs to deftly handle a wide range of laboratory cleaning challenges. Wash programs developed specifically for laboratory applications such as “Organica” and “Inorganica” have been field-proven in thousands of laboratories worldwide.

These standard wash routines are ideal for the vast majority of cleaning applications. For added flexibility, the control system features the custom program slot to include a wash routine with customized wash and rinse temperatures, or to add wash steps and modified holding times. Should your cleaning application require special attention, our application specialists will work with you to guarantee the best programming for your specific needs.

Self Diagnostics

While the Miele controller’s primary purpose is to be an easy interface for lab technicians, it also provides extensive information for those concerned with validation and technical service support.

All critical systems such as pumps, flow meters, temperature sensors, air filters, water softening system, and liquid dispensers are monitored by the controller. Error conditions are indicated by means of an alpha-numeric code that appears on the LCD. Some examples of the 40 conditions that could cause an alarm are:

- The wash temperature is not achieved
- No liquid chemicals are dispensed
- Salt is needed for softener
- Circulation pump is not rotating
- HEPA filter requires changing
- No water is entering washer
- Heating out of acceptable range
- Machine is not draining properly

By notifying you of specific machine conditions, you are assured of a valid wash routine and fast troubleshooting of mechanical issues. In this way, you can identify the condition and take care of it as quickly as possible.

Advanced Cleaning

Program selection is accomplished through a single, easy-to-use dial, enabling an operator to use the machine even when wearing protective gloves.

The Multitronic display and alert system has been designed to provide clear and concise indication of all machine actions. The alphanumeric LCD can be toggled to display wash program step, temperature, or time elapsed.

At a glance, the wash step indicator clearly shows what stage the program is currently in. The display also shows fault codes, alerting technicians of an impediment to the wash performance.

Completion of the wash program is indicated both on the display and acoustically with the included buzzer, helping alert staff when the glassware is ready. System malfunctions such as drain or fill errors, are signaled both visually, and audibly using the error fault lights and buzzer.

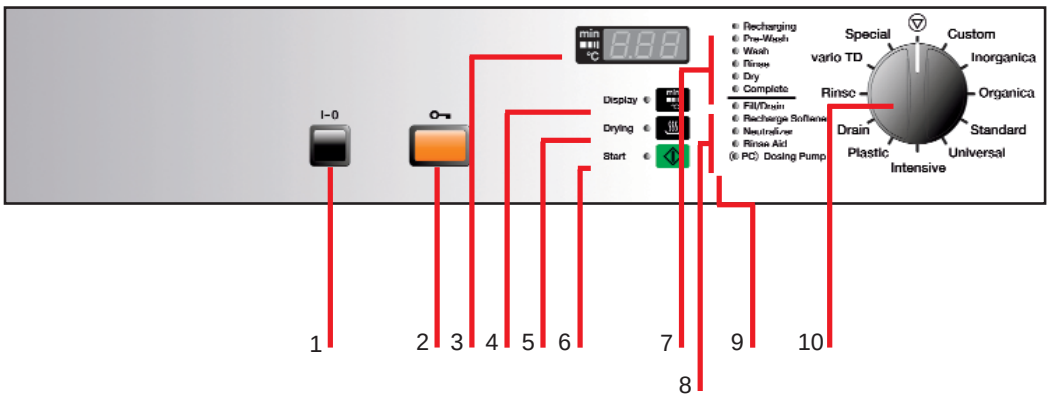

1 On/Off button
2 Electronic door lock
3 Alphanumeric LCD
4 *Minute / Wash Step / ° C* LED display
5 Optional drying selector
6 Program selector button
7 Program sequence indicator LEDs
8 Error indicator LEDs
9 Optical PC interface
10 Rotary selector dial

A Host of Accessory Items

Wide Array of Baskets & Inserts

Miele manufactures washers capable of expertly cleaning a vast assortment of glassware types and sizes. This flexibility can only be achieved by designing a wide array of unique wash baskets and inserts.

This interchangeable basket system ensures a precise match to your specific cleaning requirements. And, thanks to Miele's universal design for undercounter wash baskets and inserts, a new basket will fit the new G 7893 as precisely as it will a 20-year-old model.

Miele undercounter washers feature injection cleaning on both the top and bottom rack, providing excellent throughput, improved loading ergonomics and a wide selection of wash load possibilities. Interchangeable injectors allow for easy replacement of older injectors ensuring the basket has many years of useful operation. Baskets are also available that feature drying tubes, connecting the wash basket to the drying paths in the G 7893. The result is superior injection-drying of narrow-necked items.

For further information on baskets and inserts, see the Miele catalog titled "Wash Baskets and Machine Accessories" or just visit labwashers.com.

Transfer Cart

Miele makes it easy and ergonomically safe to load glassware into the G 7893 with the adjustable Mielcar mobile cart. With 2 shelves, lockable wheels and adjustable height, this cart is a perfect accessory for efficient and safe loading of glassware into the G 7893.

G 7895/1Pure Water System

The G 7895/1 connects to your tap water and produces pure water for your glassware washer. A stainless steel canister and resin is included. The cabinet is designed to fit undercounter next to your G 7893 glassware washer for convenience and nice appearance.

Washer Base Stand

A stainless steel base raises the height of your washer by 12 inches, for free-standing applications, making loading and unloading more ergonomic.

Liquid Detergent Dispensing

Optional for the G 7893 is an off-board liquid detergent dispenser. Automatic liquid dispensing provides higher levels of accuracy and eliminates potential user error in the dispensing process. This automatic system means your staff will spend less time handling detergents.

neodisher™ Detergents

Miele offers a wide selection of neodisher™ brand detergents, neutralizers, and additives ideal for all of your cleaning requirements.

For many laboratory applications an alkaline based detergent dispensed during the wash step followed by a rinse that includes organic acid will do the job without leaving residues to interfere with research results. Yet Miele provides a wide array of cleaning agents including phosphate-free detergents, emulsifiers, defoaming agents and more.

The neodisher™ liquid and powder detergents have been tested and proven to yield the best results possible in your Miele critical cleaning system. Miele provides an application chart recommending detergents according to your application to get maximum results from your G 7893 glassware washer.

More information can be found in Miele's brochure titled "neodisher Cleaning Agents" or online at labwashers.com.

Environmental Friendliness

Miele Manufactures Responsibly

Miele consistently engineers products to be energy efficient and have the smallest possible environmental impact. This is achieved through the use of leading efficient manufacturing techniques, machine construction from easily recyclable materials, and the drive to produce the cleanest operating, most efficient machines on the market today.

Miele's production facilities have earned the international recognized DIN EN ISO 14001 Certification for environmental management practices.

Machine Construction

Miele manufactures washers that are constructed of 90% metal. This propels Miele machines to perform during their duty cycle and well beyond. Miele also uses minimal plastic components - each of which is clearly marked to facilitate recycling at the end of its life cycle. And cabinets can easily be disassembled at the end of machine life for recycling.

Durability

Every Miele glassware washer is manufactured to last 15,000 operating hours and Miele maintains spare parts up to 15 years after the end of serial production of all washer models.

Packaging Responsibly

From 1996 to 2005, Miele has reduced total consumption of packaging materials for transport and sales by 19.8% despite an increase in production of 53.2%.

Low Chemical Usage

Miele's use of powerful circulation pumps, high water temperature and low water levels means that less detergent and acid is required to get your glassware clean. This not only lowers your consumable costs, it is also a more "green" way to handle your lab glassware washing.

Minimal Water Consumption

The Miele G 7893 is designed for effective cleaning while at the same time is extremely efficient. Because the washer utilizes flow meters, incoming water fills can be varied in volume and thus optimized. By way of comparison, a typical wash program in a Miele unit would use approximately 31% less water than that same program in another brand.

Electrical Efficiency

Miele washers are designed to heat water up quickly and efficiently. Because less water is used, less heating time is required. Additionally, Miele units are thoroughly insulated to minimize heat and noise output. This means lower burden on your building HVAC system and on your lab.

Exceptional Service

The Exclusive Application Laboratory

Drawing on a library of knowledge constructed over 100 years through cleaning innovation and expertise, Miele provides world-class application assistance and consultation. A key component of this is the exclusive Miele Application Laboratory, housed in New Jersey, with a sister lab in Germany.

Through these active Application Labs, Miele constantly surveys the horizon for unique cleaning challenges. This ensures you a truly competent and uniquely tailored cleaning system.

Miele will also guide you, through testing, to the proper basket system. Whether cleaning narrow-necked Erlenmeyer flasks containing solvents on an injection insert, orthopedic knee implants covered in titanium dust in the proper wash rack, or loose stainless steel gears coated in cutting oils in a fine mesh basket, you are ensured consistent results.

Technical Service Support

Place your trust in Miele, and you are incorporating an industry-leading cleaning system into your facility. A network of dedicated and highly specialized Miele Professional Technical Service personnel guarantees that on-site assistance is close at hand.

To ensure a robust operating life, Miele produces spare parts for at least 15 years from the discontinuation of series production for every model. Coupled with industry-leading engineering, you have a rock-solid, reliable cleaning solution.

Miele sets the standard in terms of knowledge, application support, and training. Beyond comprehensive machine service, Miele Professional Technical Service also excels in installation and application-related issues, supplying you with the flexibility needed to deftly handle evolving goals and application issues.

Miele Preventive Maintenance

In addition to your comprehensive warranty provided with the washer, Miele offers three preventative maintenance plans to keep your machine running at peak performance and to keep downtime to an absolute minimum. For further information contact the Miele Technical Service Department at 800-991-9380.

Validation Services

Featuring the Multitronic controller, standard RS 232 connection, multiple sensors, automatic fault indication, and a validation test port, the G 7893 is ideal for facilities requiring machine validation.

Miele validation services include extensive Miele-developed IQ/OQ documentation and fully trained validation technicians who can execute the validation. Miele technicians will work closely with you in signing off on the validation documents and demonstrating that the washer is installed and operating according to specification.

Miele technicians utilize properly calibrated tools and know the Miele washers inside and out. This ensures a thorough yet fast validation so you can get up and running quickly.

Miele provides convenient set pricing for validation work to eliminate cost concerns commonly associated with hourly billing by independent validation consultants.

In short, Miele can provide turn-key IQ/OQ validation of your washers for a reasonable, set price.

Laboratory Glassware Washers
Technical Data

Machine	Miele G 7893
Control Unit	
Multitronic:	Multitronic control system with programmable holding time and temperatures, standard RS 232 for
	connection to printer or PC, and simple alphanumeric LCD screen
Standard:	8 standard wash programs with utility programs
Custom:	1 available space for a custom wash program to be created and stored
Temperatures	
Wash:	Freely adjustable up to 93° C
Final Rinse:	Freely adjustable up to 93° C
Cleaning Mechanism	
Rotary:	Dual spray arms located at the top and bottom of chamber, third spray arm on upper basket
Direct Injection:	Upper, lower, and dual injection baskets available
Drying	Integrated HEPA-filtered forced-air drying system w/freely adjustable time & temp settings w/cool-down step
	Temp adj: 122 - 210º F (50 - 99º C) 1º increments; time adj.: 1 - 99 min., 1 minute increments
Water Softener	Built-in softener with easily programmed water hardness control
Steam Condenser	Included; no external venting required
Detergent & Neutralizer Dispensing	
Detergent:	Standard powder door cup dispenser; optional liquid detergent dispensing
Neutralizer:	1 Peristaltic-type liquid neutralizer dispenser standard, 5L container stored externally from machine
Optional:	1 Peristaltic-type dosing connection for 5L or 10L containers optional, stored externally from machine
Main Circulation Pump	
Circulation:	106 gal/min (400 l/min)
	Pump includes sensor to protect against overheating
Cabinet and Chamber Construction	
Exterior:	Brush finish type 304 stainless steel top, front, sides and bottom
Interior:	Type 304 stainless steel chamber sides, back and top
	Type 316 polished stainless steel chamber floor and door
Waterproof System	Automatically shuts off incoming water at source in event of leakage
Plumbing Connections	
Tap (3 connections, hoses included):	a) *Hot water for wash cycles:* One 1/2” ID pressure hose, 5’ 7” long with 3/4” hose thread
	Input pressure: 10 - 147 PSI (recommended 25 - 60 PSI), min. flow rate of 2.5 gal/min (10.5 l/min)
	Max incoming water temperature: 158° F (70° C)
	b, c) *Cold water for wash cycles & steam condenser:* Two 1/2” ID pressure hoses, 5’ 7” long w/ 3/4” hose thread
	Input pressure: 10 - 147 PSI (recommended 25 - 60 PSI), min. flow rate of 2.5 gal/min (10.5 l/min)
	Max incoming water temperature: 68° F (20° C)
DI (1 connection, hose included):	d) *DI water for rinse cycles:* One 1/2” ID pressure hose, 5’ 7” long with 3/4” hose thread
	Input pressure: 25 - 145 PSI; if DI system is less than 25 PSI, a pump kit is recommended
	Max incoming water temperature: 158° F (70° C)
	capable of accepting pure water up to 18 megohm
Drain Connections	
Drain (2 connections, hoses included):	Two 7/8” ID flexible drain hoses, 4’ 11” long; max drain height = 3’. Max drain length = 13’
	Recommended connection to separate standpipe
Flow Rate:	Maximum amount of water a drain needs to accept would be both numbers at the same time: 3.5 gal/min
	2.5 gal/min (10.5 l/min) for chamber fill
	1 gal/min (4 l/min) for steam condenser fill
Electrical Requirements	3 AC 208 V, 60 Hz, 3 x 20 Amps, 6.0kW total load
Optional Conversion:	1 AC 208 V, 60 Hz, 2 x 30 Amps, 6.0kW total load (Must specify at time of order)
	Unit is equipped with a 5’11”, 12/4 AWG unterminated power cord
Noise Level	52.9 dBA average noise level for a cycle including drying (measured 1m from front)
Dimensions	
Exterior:	32.3” - 33.5” H x 23.6” W x 23.7” D (Height variation due to adjustable leveling feet and removable lid.)
Interior (Chamber):	19.7” H x 21.1” W x 19.7” D

Miele PROFESSIONAL

Miele Professional
9 Independence Way
Princeton, NJ 08540
& 800.991.9380
🖷 609.419.4241
labwasher.com

Miele Limited
161 Four Valley Drive
Vaughan, ON L4K 4 V8
Canada
& 800.643-5381
🖷 905.532.2290
miele.ca

Miele S.A. de C.V.
Av. Santa Fe 170, German Centre: 0-4-2
Col. Lomas de Santa Fe
C.p. 01210.Mexico, D.F.
& (+5255) - 8503 9870 Al 73
🖷 (+5255) - 8503 9874
miele-professional.com.mx

Every effort has been made to ensure that the information given in this brochure is correct at the time of printing. However, due to continuous product improvement, Miele reserves the right to make changes to products and technical data without prior notice.

B999735 08/08